Operating instructions

Metering pumps
Hydro/ 2 and Hydro/ 3

EN

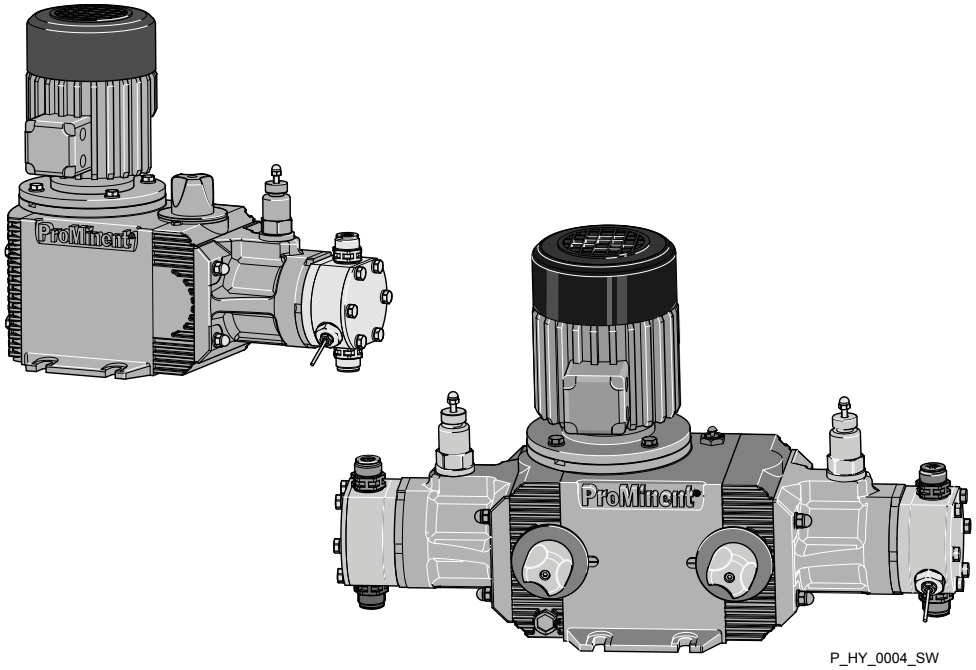

P_HY_0004_SW

Please carefully read these operating instructions before use. · Do not discard.
The operator shall be liable for any damage caused by installation or operating errors.
The latest version of the operating instructions are available on our homepage.

Supplementary information



Fig. 1: Please read!

Read the following supplementary information in its entirety! Should you already know this information, you will benefit more from referring to the operating instructions.

The following are highlighted separately in the document:

- Enumerated lists

→ Operating guidelines

⇨ Outcome of the operating guidelines

- see (reference)

Information

This provides important information relating to the correct operation of the unit or is intended to make your work easier.

Safety Information

Safety information is identified by pictograms - see Safety Chapter.

Information in supplier instructions

Refer to the precise designation of suppliers' components in the "Technical Data" chapter for ease of finding the relevant information.

Validity

These operating instructions conform to current EU regulations applicable at the time of publication.

State the identity code and serial number

Please state identity code and serial number, which you can find on the nameplate when you contact us or order spare parts. This enables the unit type and material versions to be clearly identified.

EX pumps only

The nameplate stuck on the cover page is identical to the pump supplied so that there is a clear link between the operating instructions and the pump.

Table of contents

1 Identity code 5
2 Safety Chapter 9
3 Storage, transport and unpacking 16
4 Overview of device / control elements 18
5 Functional description 19
6 Assembly 20
7 Installation 24
7.1 Installation, hydraulic 24
7.1.1 Basic installation notes 27
7.2 Installation, Electrical 29
8 Start up and operation 35
8.1 Bleeding the liquid end 38
8.2 Calibrate the stroke control drive (Option) 39
9 Maintenance 40
10 Repairs 46
10.1 Cleaning valves 47
10.2 Replacing the diaphragm 49
10.3 Repair the diaphragm rupture sensor 51
10.4 Calibrating the dosing rate 53
11 Troubleshooting 56
12 Decommissioning and Disposal 60
12.1 Decommissioning 60
12.2 Disposal 61
13 Technical data 63
13.1 Performance data 63
13.2 Metering reproducibility 66
13.3 Viscosity 66
13.4 Weight 67
13.5 Wetted materials 67
13.6 Ambient conditions 67
13.6.1 Temperatures 67
13.6.2 Air humidity 69
13.7 Installation height 69
13.8 Housing degree of protection 69
13.9 Motor data 69
13.10 Diaphragm rupture sensor 71
13.11 Safety relief valve (HP2 and HP3) 72
13.12 Stroke sensor 72
13.13 Heating cartridge 72
13.14 Protection temperature limiter (ATEX only) 73
13.15 Filling volumes 73
13.15.1 Hydraulic oil 73
13.16 Sound pressure level HP2a / Hp3a 73
13.17 Supplement for modified versions 73
14 Ordering Information 74
14.1 Exploded view of the drawing 74
14.2 Spare parts kits 74
14.3 Diaphragms 76
14.4 General 76
15 Dimensional Drawings 78
16 Earthing drawing 87

17 EC Declaration of Conformity for Machinery 88
18 EC Declaration of Incorporation for ATEX HP2 Machines 89
19 EC Declaration of Incorporation for ATEX HP3 Machines 90
20 EC Declaration of Conformity for ATEX HP2 Machines 91
21 EC Declaration of Conformity for ATEX HP3 Machines 92
22 Diagrams for setting the metering capacity 93

1 Identity code

HP2a	Hydro/ 2, version a										
	Power end type										
	H	Main power end									
	D	Main power end, double head version									
	E	Main power end for add-on power end									
	F	Main power end double head version for add-on power end									
	A	Add-on power end									
	B	Add-on power end double head version									
		Type *	Capacity								
		_ _ _ _ _ _	Performance data at maximum back pressure and type: refer to nameplate on the pump housing								
			Dosing head material								
			SS	Stainless steel							
			PV	PVDF							
			HC	Hastelloy C							
			TT	PTFE + carbon							
				Seal material							
				T	PTFE						
					Displacement body						
					0	Standard multi-layer safety diaphragm with rupture signalling					
						Dosing head design					
						0	no valve spring (standard)				
						1	With valve spring				
						D	Double ball valve (only for SST and HCT)				
						H	HV version for (only for 025019 ... 025060)				
							Hydraulic connector				
							0	Standard threaded connector (in line with technical data)			
							E	With DIN ISO flange			
							F	With ANSI flange			
								Design			
								0	with ProMinent® logo (standard)		
								1	Without ProMinent® logo		
								M	Modified*	* order-related design, refer to order paperwork for pump features	
									Electric power supply		
									_	Connection data - see motor nameplate	
									1	No motor, with flange 200/80	
									3	No motor, with flange 160/71	
									4	No motor, with 56C flange (NEMA)	
									0	Add-on power end	

HP2a	Hydro/ 2, version a														
										Degree of protection					
										0	IP 55 (Standard) ISO class F				
										1	Exe-design ATEX-T3				
										2	Exde-design ATEX-T4				
										A	ATEX power end				
											Stroke sensor				
											0	No stroke sensor (standard)			
											1	Stroke sensor (EX zone capable)			
												Stroke length adjustment			
												0	Manual (standard)		
												1	With servomotor, 230 V, 50/60 Hz		
												2	With servomotor, 115 V, 60 Hz		
												A	With control motor 0...20 mA 230 V, 50/60 Hz		
												B	With control motor 4...20 mA 230 V, 50/60 Hz		
												C	With control motor 0...20 mA 115 V, 60 Hz		
												D	With control motor 4...20 mA 115 V, 60 Hz		
													Hydraulic oil		
													0	Standard	
													1	Food approval for oil	
													2	Low temperature to -25 °C	
													3	Low temperature Zone 2	

*** Type, power (at 50 Hz)**

Type	Capacity		Type	Capacity		Type	Capacity	
	bar	l/h		bar	l/h		bar	l/h
100003	100[1]	3	**064007**	64[1]	7	**025019**	25[1]	19
100006	100[1]	6	**064015**	64[1]	15	**025040**	25[1]	40
100007	100[1]	7	**064018**	64[1]	18	**025048**	25[1]	48
100009	100[1]	9	**064022**	64[1]	22	**025060**	25[1]	60
100010	100[1]	10	**064025**	64[1]	25	**025068**	25[1]	68

[1] Maximum back pressure for TTT material version: 16 bar!

Maximum back pressure for PVT material version: 25 bar!

HP3a	Hydro/ 3, version a										
	Power end type										
	H	Main power end									
	D	Main power end, double head version									
	E	Main power end for add-on power end									
	F	Main power end double head version for add-on power end									
	A	Add-on power end									
	B	Add-on power end double head version									
		Type	Capacity								
		_ _ _ _ _ _	Performance data at maximum back pressure and type: refer to the nameplate on the pump								
			Dosing head material								
			SS	Stainless steel							
			PV	PVDF							
			H C	Hastelloy C							
			TT	PTFE + carbon							
				Seal material							
				T	PTFE						
					Displacement body						
					0	Standard multi-layer safety diaphragm with rupture signalling					
						Dosing head design					
						0	no valve spring (standard)				
						1	With valve spring				
						D	Double ball valve (for 100010 ... 100035, 064019 ... 064060 and SST / HTC)				
						H	HV version for (for 064019 ... 064068, 025048 ... 025170)				
							Hydraulic connector				
							0	Standard threaded connector (in line with technical data)			
							E	With DIN ISO flange			
							F	With ANSI flange			
								Design			
								0	with ProMinent® logo (standard)		
								1	Without ProMinent® logo		
								M	Modified*	* order-related design, refer to order paper-work for pump features	
									Electric power supply		
									_	Connection data - see motor nameplate	
									1	No motor, with flange 200/80	
									3	No motor, with flange 160/71	
									4	No motor, with 56C flange (NEMA)	
									0	Add-on power end	
										Degree of protection	

HP3a	Hydro/ 3, version a													
										0	IP 55 (Standard) ISO class F			
										1	Exe-design ATEX-T3			
										2	Exde-design ATEX-T4			
										A	ATEX power end			
											Stroke sensor			
											0	No stroke sensor (standard)		
											1	Stroke sensor (EX zone capable)		
												Stroke length adjustment		
												0	Manual (standard)	
												1	With servomotor, 230 V, 50/60 Hz	
												2	With servomotor, 115 V, 60 Hz	
												A	With control motor 0...20 mA 230 V, 50/60 Hz	
												B	With control motor 4...20 mA 230 V, 50/60 Hz	
												C	With control motor 0...20 mA 115 V, 60 Hz	
												D	With control motor 4...20 mA 115 V, 60 Hz	
													Hydraulic oil	
													0	Standard
													1	Food approval for oil
													2	Low temperature to -25 °C
													3	Low temperature Zone 2

*** Type, power (at 50 Hz)**

Type	Capacity		Type	Capacity		Type	Capacity	
	bar	l/h		bar	l/h		bar	l/h
100010	100[1]	10	**064019**	64[1]	19	**025048**	25[1]	48
100021	100[1]	21	**064040**	64[1]	40	**025100**	25[1]	100
100025	100[1]	25	**064048**	64[1]	48	**025120**	25[1]	120
100031	100[1]	31	**064060**	64[1]	60	**025150**	25[1]	150
100035	100[1]	35	**064068**	64[1]	68	**025170**	25[1]	170

[1] Maximum back pressure for TTT material version: 16 bar!

Maximum back pressure for PVT material version: 25 bar!

2 Safety Chapter

Explanation of the safety information

The following signal words are used in these operating instructions to identify different severities of a hazard:

Signal word	Meaning
WARNING	Denotes a possibly hazardous situation. If this is disregarded, you are in a life-threatening situation and this can result in serious injuries.
CAUTION	Denotes a possibly hazardous situation. If this is disregarded, it could result in slight or minor injuries or material damage.

Warning signs denoting different types of danger

The following warning signs are used in these operating instructions to denote different types of danger:

Warning signs	Type of danger
	Warning – hand injuries.
	Warning – high-voltage.
	Warning – flammable substances.
	Warning – hot surface.
	Warning – danger zone.

Intended Use

- Only use the pump to meter liquid feed chemicals.
- In potentially explosive atmospheres only operate the pump with the appropriate nameplate for pumps for use in areas at risk of explosion in compliance with Directive 94/9/EC in accordance with the European guidelines.
  Ensure that the explosion group, category and degree of protection specified on the label corresponds to or is better than the conditions prevalent in the intended field of application.
- The pump is only approved for use with flammable feed chemicals if it has the identity code option "Multi-layer safety diaphragm with visual rupture display", is operated at back pressures over 2 bar with metal liquid ends and if the operator implements appropriate safety measures.
- Only use the pump after it has been correctly installed and started up in accordance with the technical data and specifications contained in the operating instructions. When working at temperatures arising using a heating cartridge, bear in mind their effect.
- Observe the general limitations with regard to viscosity limits, chemical resistance and density - see also the ProMinent Resistance List (in the Product Catalogue or at www.prominent.com)!
- All other uses or modifications are prohibited.

- Never operate pumps in premises at risk from explosion without the relevant nameplate (and the respective EC Declaration of Conformity) for pumps for use in premises at risk from explosion.
- The pump is not intended for the metering of gaseous media and solids.
- The pump is not intended for the metering of explosive substances and explosive mixtures.
- The ATEX version is not intended for the metering of electrically non-conductive media (conductivity less than 50 pS/m).
- Do not expose the ATEX design to any ionising radiation, electromagnetic high frequency radiation in the range 10^4 ... $3x10^{15}$ Hz or ultrasound without putting in place measures in line with EN 1127-1.
- The pump is not intended for unprotected outside use.
- The pump is only intended for industrial use.
- The pump should only be operated by trained and authorised personnel, see the following table.
- You are obliged to observe the information contained in the operating instructions at the different phases of the unit's service life.
- You are obliged to observe the information contained in the operating instructions of the accessory devices at the different phases of their respective service lives.

Qualification of personnel

Task	Qualification
Storage, transport, unpacking	Instructed person
Assembly	Technical personnel, service
Planning the hydraulic installation	Qualified personnel who have a thorough knowledge of metering pumps In areas at risk from explosion: ATEX qualified person, ATEX electrical technician
Hydraulic Installation	Technical personnel, service
Installation, electrical	Electrical technician, In areas at risk from explosion: ATEX electrical technician
Start up	Qualified personnel In areas at risk from explosion: Qualified personnel with ATEX training; checking of the electrical installation: recognised competent person
Operation	Instructed person
Maintenance, repair	Technical personnel, service In areas at risk from explosion: ATEX qualified person, ATEX electrical technician
Decommissioning, disposal	Technical personnel, service
Troubleshooting	Qualified person, electrical technician, instructed person, customer service - dependent on the requirement In areas at risk from explosion: ATEX electrical technician; checking of the electrical installation: recognised competent person

Explanation of the table:

Qualified personnel

A qualified employee is deemed to be a person who is able to assess the tasks assigned to him and recognise possible dangers based on his/her technical training, knowledge and experience, as well as knowledge of pertinent regulations.

Note:

A qualification of equal validity to a technical qualification can also be gained by several years of employment in the relevant field of work.

Electrical technician

An electrical technician is able to complete work on electrical systems and recognise and avoid possible dangers independently based on his/her technical training and experience, as well as knowledge of pertinent standards and regulations.

The electrical technician should be specifically trained for the working environment in which he is employed and know the relevant standards and regulations.

An electrical technician must comply with the provisions of the applicable statutory directives on accident prevention.

A qualification of equal validity to a technical qualification can also be gained by several years of employment in the relevant field of work.

ATEX explosion protection electrical technician

The electrical technician with an additional explosion protection qualification should be specifically trained for the work area in which they are employed and know the relevant standards and regulations. The electrical technician with an additional explosion protection qualification can work on electrical systems and independently recognise and avoid possible dangers based on their technical training and experience.

The electrical technician with an additional explosion protection qualification is familiar with all the standards and regulations applicable to explosion protection, in particular, but not however exclusively, with all parts of EN 60079 [electrical equipment for areas at risk of a gas explosion].

The electrical technician with an additional explosion protection qualification must comply with the provisions of the applicable statutory directives on accident prevention.

Recognised competent person

To carry out explosion hazard inspections the competent person must have:

- completed a relevant course of study or
- a comparable technical qualification or
- another technical qualification combined with long-term experience of safety technology.

The person must be knowledgeable in respect of the relevant body of standards and regulations and have worked in the area for at least one year. Participation in options for exchanging experience is required.

Particular requirements are made in respect of competent persons who carry out tests on repaired devices/parts. They must be **recognised** in this respect by the responsible authorities (e.g. the district council).

Instructed person

An instructed person is deemed to be a person who has been instructed and, if required, trained in the tasks assigned to him/her and possible dangers that could result from improper behaviour, as well as having been instructed in the required protective equipment and protective measures.

Service

Customer Service department refers to service technicians, who have received proven training and have been authorised by ProMinent or ProMaqua to work on the system.

Safety information

CAUTION!

These operating instructions include notes and quotes from German guidelines relating to the system operator's scope of responsibility. This information does not discharge the operator from his responsibility as an operator and is intended only to remind him or make him aware of specific problem areas. This information does not lay claim to being complete, nor applicable to every country and every type of application, nor to being unconditionally up-to-date.

WARNING!

Only use ATEX pumps in the area at risk from explosion

- Observe the European Operator Directive 99/92/EC (ATEX 137), implemented in Germany by the Industrial Health and Safety Regulation and the German Ordinance on Hazardous Substances, for the installation and operation of equipment in areas at risk from explosion.
- Observe the European standards EN 1127-1, EN 60079-10, EN 60079-14, EN 60079-17 and EN 60079-25 and EN 50039 for inherently safe electrical circuits. (In Germany these standards are partly implemented by VDE 0165 and VDE 0118).
- Adhere to the respective national regulations outside of the EU.
- Ensure that installations in areas at risk from explosion are checked by a "recognised competent" person. This applies specifically to intrinsically safe circuits.
- The following information relates essentially to specifics in areas at risk from explosion and does not replace the standard operating instructions.
- Only clean plastic parts carefully with a damp cloth to avoid electrostatic charges and sparks.

WARNING!

Warning of dangerous or unknown feed chemical

Should a dangerous or unknown feed chemical be used: It may escape from the hydraulic components when working on the pump.

- Take appropriate protective measures before working on the pump (e.g. safety glasses, safety gloves, ...). Observe the safety data sheet for the feed chemical.
- Drain and flush the liquid end before working on the pump.

WARNING!

Danger from hazardous substances!

Possible consequence: Fatal or very serious injuries.

Please ensure when handling hazardous substances that you have read the latest safety data sheets provided by the manufacture of the hazardous substance. The actions required are described in the safety data sheet. Check the safety data sheet regularly and replace, if necessary, as the hazard potential of a substance can be re-evaluated at any time based on new findings.

The system operator is responsible for ensuring that these safety data sheets are available and that they are kept up to date, as well as for producing an associated hazard assessment for the workstations affected.



CAUTION!

Warning of feed chemical spraying around

Feed chemical can spray out of the hydraulic components if they are manipulated or opened due to pressure in the liquid end and adjacent parts of the system.

– Disconnect the pump from the mains power supply and ensure that it cannot be switched on again by unauthorised persons.
– Depressurise the system before commencing any work on hydraulic parts.



CAUTION!

Warning of feed chemical spraying around

An unsuitable feed chemical can damage the wetted parts of the pump.

– Take into account the resistance of the wetted materials when selecting the feed chemical - see the ProMinent Product Catalogue or visit our homepage.



WARNING!

Danger of injury to personnel and material damage

The pump must only be opened at those points required to be opened by these operating instructions.

It may only be opened in other positions upon receipt of written authorisation from the ProMinent head office, Heidelberg.



WARNING!

Adjusted pressure switches fail

– The switching point of the 42 V pressure switch must not be changed.
– The ATEX pressure switch must not be reprogrammed.
  It could result in overheating of the pump.



CAUTION!

Danger of personnel injury and material damage

The use of untested third party parts can result in personnel injuries and material damage.

– Only fit parts to metering pumps, which have been tested and recommended by ProMinent.



CAUTION!

Danger from incorrectly operated or inadequately maintained pumps

Danger can arise from a poorly accessible pump due to incorrect operation and poor maintenance.

– Ensure that the pump is accessible at all times.
– Adhere to the maintenance intervals.

Information in the event of an emergency

In the event of an electrical accident, disconnect the mains cable from the mains or press the emergency cut-off switch fitted on the side of the system!

If feed chemical escapes, also depressurise the hydraulic system around the pump as necessary. Adhere to the safety data sheet for the feed chemical.

Safety information for operating instructions

Prior to commissioning of the system or system component, it is the responsibility of the system operator to obtain the latest safety data sheet for the chemicals / resources to be used with the system from the supplier. Based on the information provided in the data sheets concerning health and safety, water and environmental protection, and taking into consideration the actual operating environment on site, it is the responsibility of the operator to create the legal framework for safe operation of the system or system component, such as for example the preparation of operating instructions (operator duties).

Safety Equipment

Fixed, isolating protective equipment

During use of the pump all such parts should be secured in their position.

Protective equipment	May only be removed by*:
Terminal box cover, motor	Electrical technician, ATEX electrical technician, customer service
Flange cover, side	Service
only with ATEX version with add-on power end: Coupling flange inspection cover	Service
only with ATEX version "without motor": Motor connection inspection cover	Service
Protective cowling above the motor fan	Service
Only with additional equipment: Their corresponding parts	Technical personnel, service

* Only if required by the operating instructions and if the mains cable remains disconnected from the mains voltage.

Other safety equipment - ATEX

WARNING!

- Stick the following warning label to pumps that contain parts made of electrically non-conducting plastic.
- Never stick a second label on top of the label.
- Ensure that the label is always fitted and legible.



Fig. 2

Requirements, if the motor is being installed independently

The operator must be able to:

- perform a risk assessment
- create and attach a nameplate
- create an EC Declaration of Conformity
- adapt the operating instructions, if necessary
- correctly install the motor
- for ATEX motors: perform an ignition hazard assessment

Identity code versions of pumps in areas at risk from explosion

Only combinations of identity code versions listed in the corresponding EC Declaration of Conformity in the appendix are permitted in areas at risk from explosion.

PVDF is generally ruled out as material for the dosing head!

Only use PTFE as the material for the dosing head together with an electrical diaphragm rupture sensor and a discharge-side flow control!

Sound pressure level

Sound pressure level LpA < 70 dB according to EN ISO 20361

at maximum stroke length, maximum stroke rate, maximum back pressure (water)

3 Storage, transport and unpacking

Safety information

WARNING!

The transporting of pumps which have been used with radioactive feed chemicals is forbidden!

They will also not be accepted by ProMinent!

WARNING!

Only return the metering pump for repair in a cleaned state and with a flushed liquid end - refer to the chapter "Decommissioning"!

Only return metering pumps with a completed Decontamination Declaration form. The Decontamination Declaration constitutes an integral part of an inspection / repair order. A unit can only be inspected or repaired when a Declaration of Decontamination Form is submitted that has been completed correctly and in full by an authorised and qualified person on behalf of the pump operator.

The "Decontamination Declaration Form" can be found at www.prominent.com.

CAUTION!

Danger of environmental and material damage

The unit can be damaged or oil may escape due to incorrect or improper storage or transportation!

- The unit should only be stored or transported in a well packaged state - preferably in its original packaging.
- Only transport the unit with the locking screw - not the bleed plug - fitted to the oil filling opening.
- The packaged unit should also only be stored or transported in accordance with the stipulated storage conditions.
- The packaged unit should be protected from moisture and the ingress of chemicals.

CAUTION!

Danger of environmental damage

Pumps with a liquid end are supplied filled with oil.

- When transporting, take care that no oil can escape.

Storage

Personnel: ■ Technical personnel

1. Plug the caps on the valves.
2. Check whether the sealing screw is in place on the oil filler neck.
3. Preferably place the pump standing vertically on a pallet and secure against falling over.
4. Cover the pump with a tarpaulin cover - allowing rear ventilation.

Store the pump in a dry, sealed place under the ambient conditions according to chapter "Technical Data".

Ambient conditions - refer to "Technical Data" chapter.

4 Overview of device / control elements

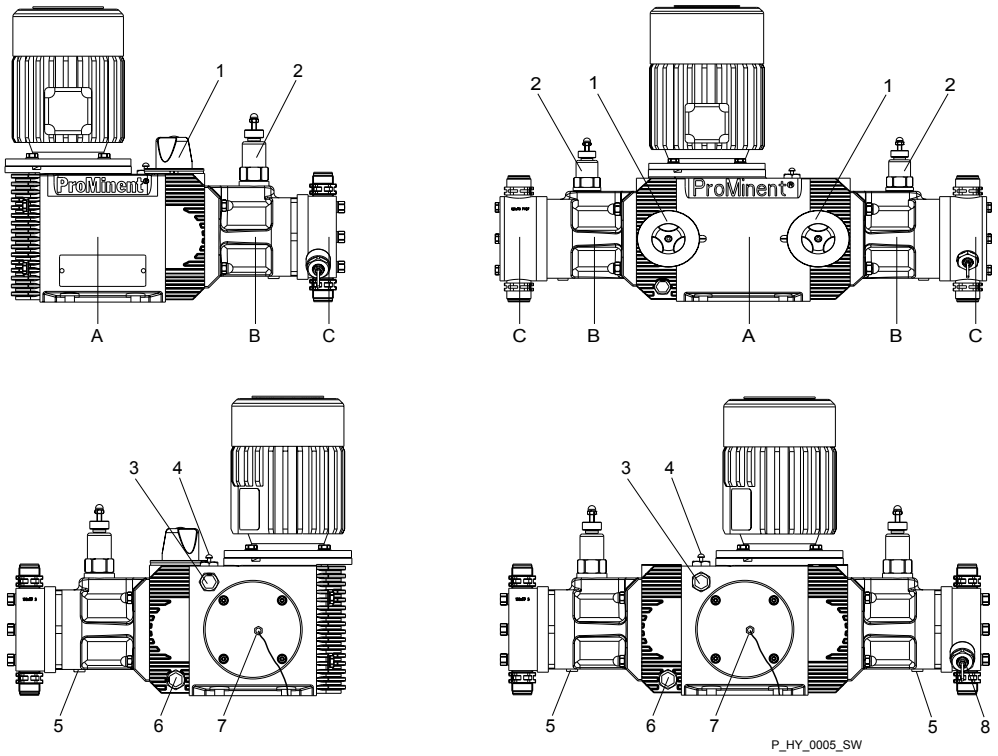

Fig. 3: Hydro, single head and double head versions

A Drive
B Hydraulic end
C Liquid end
1 Stroke adjustment knob
2 Safety relief valve
3 Oil level indicator
4 Gear bleeding plug
5 Oil drain plug
6 Oil drain screw
7 Stroke sensor (Option)
8 Diaphragm rupture sensor

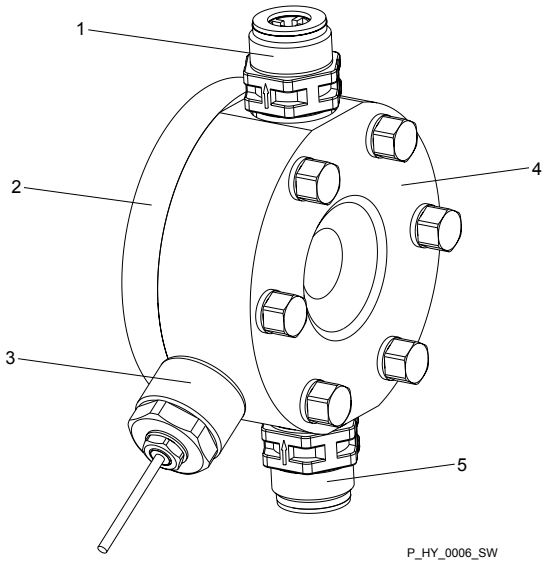

Fig. 4: Liquid end

1 Discharge valve
2 Diaphragm mounting plate
3 Diaphragm rupture sensor
4 Suction valve
5 Liquid end

5 Functional description

Pump

The metering pump is an oscillating diaphragm pump, the stroke length of which can be adjusted. An electric motor drives the pump.

Hydraulic end

The hydraulic end has a fixed safety relief valve (5). The safety relief valve provides protection for the pump power end and the diaphragm if the liquid feed pressure becomes too high. If the discharge side of the liquid end is blocked, the safety relief valve (5) opens at a real opening pressure and allows the hydraulic oil to flow into the power end housing. The real opening pressure lies above the nominal pressure (the pressure stage) – see chap. “Technical Data”.

This does not guarantee protection of the system against overpressure!

6 Assembly

– *Compare the dimensions on the dimension sheet with those of the pump.*

Motor installation - for versions without a motor

1. Select a suitable motor - it must correspond to the data of one of the motors from the table "Motor data" - see Chapter "Technical data"

WARNING!
In an area at risk from explosion, EX applies to selected equipment and methods!

2. Fit the motor correctly on the flange (qualified personnel).

   Observe the clutch operating instructions!

WARNING!
In an area at risk from explosion, EX applies to selected equipment and methods!

   With a dog clutch: The claw on the motor shaft must be fixed at the correct height, see Fig. *'Motor installation - for versions without a motor' on page 20*

3. As you have converted an "incomplete machine" into a complete machine, you must perform a conformity assessment, risk assessment, create an EC Declaration of Conformity, fit a company nameplate, ...For ATEX pumps: additionally perform an ignition hazard assessment

4. Complete the pump documentation / operating instructions.

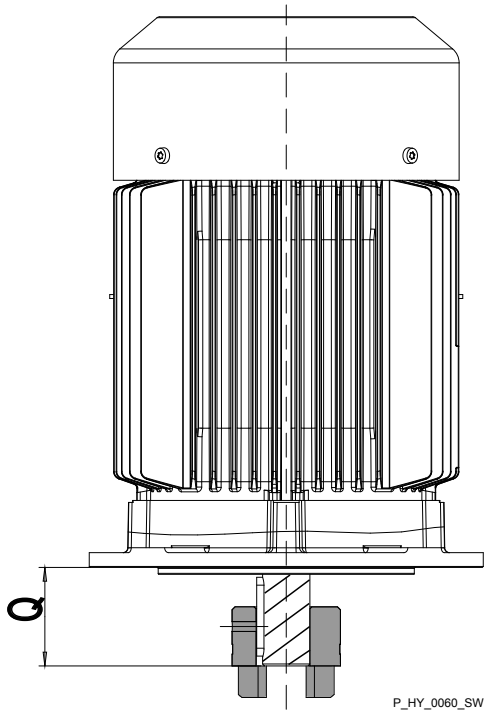

Fig. 5: Correct heigh of the clutch claw on the motor shaft

Hydro HP2

Size	Motor flange	Q
	56C	2.06" 52.32
80	200	50
71	B5, 160	30

Dimensions in mm - unless otherwise indicated.

Hydro HP3

Size	Motor flange	Q
	56C	2.06" 52.32
80	200	50
80*	B 14, Ø 160	40

Dimensions in mm - unless otherwise indicated.

* The inner diameter of the shaft is 19 mm!

Base

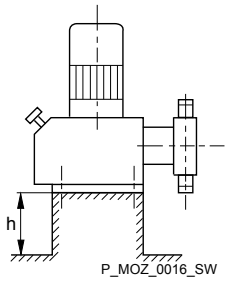

Fig. 6

WARNING!

Danger of electric shock

If water or other electrically conducting liquids penetrate into the drive housing, in any other manner than via the pump's suction connection, an electric shock may occur.

– Position the pump so that it cannot be flooded.

WARNING!

The pump can break through the base or slide off it

– Ensure that the base is horizontal, smooth and permanently load-bearing.

Capacity too low

Vibrations can disrupt the liquid end valves.

– *The supporting floor must not vibrate.*

Space requirement

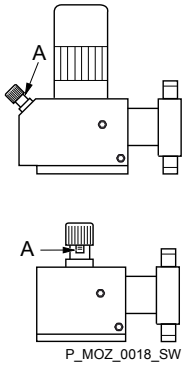

Fig. 7

WARNING!

Motor may overheat

If the necessary cooling air supply is not guaranteed, the motor may overheat. In an area at risk from explosion, it could trigger an explosion.

– Maintain sufficient clearance between the air intake opening and the walls. The distance should be greater than 1/4 of the diameter of the air intake opening.
– The fan must not suck in the exhaust air from other devices.

CAUTION!

Danger from incorrectly operated or inadequately maintained pumps

Danger can arise from a poorly accessible pump due to incorrect operation and poor maintenance.

– Ensure that the pump is accessible at all times.
– Adhere to the maintenance intervals.

WARNING!

Risk of burns with hot feed chemicals

If hot feed chemicals can heat the liquid ends above the permissible surface temperatures, persons can suffer burns from them.

– Consider attaching a "Hot surface" label to the liquid end or ...
– fitting a guard plate.

Position the pump so that control elements, such as the stroke length adjustment knob, the indicating dial A or the oil inspection window, are accessible.

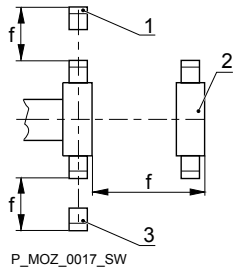

Fig. 8

In so doing, ensure there is enough space to carry out an oil change (vent screws, oil drainage plugs, oil trough ...).

1 Discharge valve
2 Dosing head
3 Suction valve

Ensure there is sufficient free space (f) around the dosing head as well as the suction and discharge valve so that maintenance and repair work can be carried out on these components.

Liquid end alignment

Capacity too low

The liquid end valves cannot close correctly if they are not upright.

– *Ensure that the discharge valve is upright.*

Fastening

Capacity too low

Vibrations can disrupt the liquid end valves.

– *Secure the metering pump so that no vibrations can occur.*

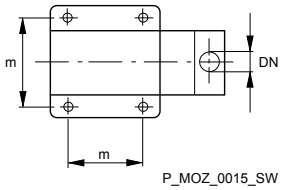

Fig. 9

1. Take the dimensions (m) for the fastening holes from the appropriate dimensions- or data sheets.
2. Fix the pump base to the supporting floor with sufficient strong screws.

   With externally mounted pumps fix the frame to the supporting floor with sufficient strong screws.

7 Installation



CAUTION!

Danger of injury to personnel and material damage

Disregarding the technical data when installing may lead to personal injuries or damage to property.

– Observe the technical data- refer to chapter "Technical Data" and, where applicable, the operating instructions of the accessories.

7.1 Installation, hydraulic



WARNING!

ATEX pumps in areas at risk from explosion

– Metering pumps in areas at risk from explosion are provided, as a matter of course, with an appropriate safety relief valve on the outlet side of the metering pump (which is used to protect against excessive heating due to overloading and impact sparks caused by the breakage of power end parts triggered by overloading).
– Likewise a temperature monitor or a pressure side flow control is to be fitting to metering pumps with hydraulic diaphragm control for T4. (Protection against impermissible heating up in the event of continuous operation by the internal relief valve).
– In the event of differing temperature classes amongst the diverse components, operation of the complete pumps should be based on the component with the lowest temperature class.
– Hydraulic diaphragm pumps are highly suitable, although the design with Ex "i" diaphragm rupture sensor and a pressure-side flow control is required.
– Ensure that installations in areas at risk from explosion are checked by a "recognised competent" person.
– Please note the relevant national regulations during installation!



WARNING!

Danger of fire with flammable feed chemicals

– Combustible media may only be transported using stainless steel or Hastelloy C dosing heads.
– Metering pumps can be used for metering combustible media, however as a matter of principle only of a design including ATEX diaphragm rupture sensors and a pressure-side flow control.
– During filling and draining of the liquid end, an expert must ensure that feed chemical does not come into contact with oxygen.
– If necessary, the operator must implement further measures.



WARNING!

Warning of feed chemical reactions to water

Feed chemicals that should not come into contact with water may react to residual water in the liquid end that may originate from works testing.

– Blow the liquid end dry with compressed air through the suction connector.
– Then flush the liquid end with a suitable medium through the suction connector.



WARNING!

The following measures are an advantage when working with highly aggressive or hazardous feed chemicals:

– Install a bleed valve with recirculation in the storage tank.
– Install an additional shut-off valve on the discharge or suction ends.



CAUTION!

Warning of backflow

A back pressure valve or a spring-loaded injection valve do not represent absolutely leak-tight closing elements.

– For this purpose use a shut-off valve, a solenoid valve or a vacuum breaker.



CAUTION!

Suction problems possible

The valves may no longer close properly with feed chemicals with a particle size of greater than 0.3 mm.

– Install a suitable filter in the suction line.



CAUTION!

Warning of the discharge line rupturing

With a closed discharge line (e.g. from a clogged discharge line or by closing a valve), the pressure that the metering pump generates can reach several times more than the permissible pressure of the system or the metering pump. This could lead to lines bursting resulting in dangerous consequences with aggressive or hazardous feed chemicals.

– Install a relief valve that limits the pressure of the pump to the maximum permissible operating pressure of the system.



CAUTION!

Warning of the discharge line rupturing

Hose lines with insufficient pressure rating may burst.

– Only use hose lines with the required pressure rating.

CAUTION!

Uncontrolled flow of feed chemical

Feed chemicals can leak through a stopped metering pump if there is back pressure.

– Use an injection valve or a vacuum breaker.

CAUTION!

Uncontrolled flow of feed chemical

Feed chemical can leak through the metering pump in an uncontrolled manner in the event of excessive priming pressure on the suction side of the metering pump.

– Do not exceed the maximum permissible priming pressure for the metering pump.
– Set up the installation properly.

CAUTION!

Warning against lines coming loose

Suction, discharge and relief lines installed incorrectly can come loose from the pump connection.

– Only use original hoses with the specified hose diameter and wall thickness.
– Only use clamp rings and hose nozzles that fit the respective hose diameter.
– Always connect the lines without mechanical tension.
  Only connect steel piping via a flexible piping section to a plastic valve body - see the following figure.

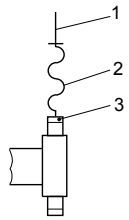

Fig. 10: Connect the steel piping to the plastic pump body as shown

1 Steel piping
2 Flexible pipe section
3 Plastic valve body

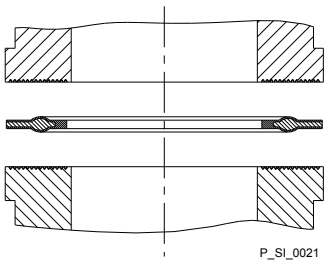

Fig. 11: Moulded composite seals with corrugated insert

CAUTION!

Warning against leaks

Leaks can occur on the pump connection depending on the insert used.

– The pump is supplied with PTFE moulded composite seals with a flare, which are used for the pump connections. They seal the connections between grooved pump valves and the grooved inserts from ProMinent - see Fig. 11.
– However, in the event that a smooth insert is used (e.g. third party part), an elastomer flat seal must be used - see Fig. 12.

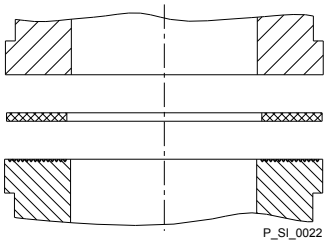

Fig. 12: Elastomer flat seal for a smooth insert

CAUTION!

Warning of feed chemical spraying around

PTFE seals, which have already been used / compressed, can no longer reliably seal a hydraulic connection.

– New, unused PTFE seals must always be used.

CAUTION!

Danger due to incorrect use of the pressure relief valve

The pressure relief valve can only protect the motor and the gear, and that only against impermissible positive pressure that is monitored by the metering pump itself. It cannot protect the system against positive pressure.

– Protect the motor and gear of the system against positive pressure using other mechanisms.
– Protect the system against illegal positive pressure using other mechanisms.

– *Precise metering is only possible when the back pressure is maintained above 1 bar at all times.*
– *If metering at atmospheric pressure, a back pressure valve should be used to create a back pressure of approx. 1.5 bar.*

Diaphragm rupture sensor

CAUTION!

Warning of unnoticed diaphragm rupture

Only above approximately 2 bar system back pressure is a signal generated upon a diaphragm rupture.

– Only rely on the diaphragm rupture sensor at back pressures greater than 2 bar.

7.1.1 Basic installation notes

Safety notes

CAUTION!

Danger resulting from rupturing hydraulic components

Hydraulic components can rupture if the maximum permissible operating pressure is exceeded.

– Never allow the metering pump to run against a closed shut-off device.
– With metering pumps without integral relief valve: Install a relief valve in the discharge line.

CAUTION!

Hazardous feed chemicals can escape

With hazardous feed chemicals: Hazardous feed chemical can leak out when using conventional bleeding procedures with metering pumps.

– Install a bleed line with a return into the storage tank.

→ Shorten the return line so that it does not dip into the feed chemical in the storage tank.

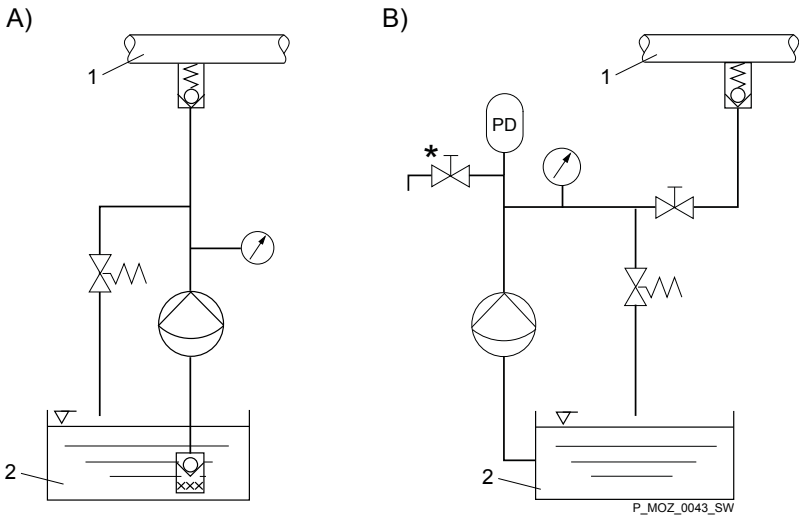

Fig. 13: (A) standard installation, (B) with pulsation damper

1 Main line
2 Storage tank

Legend for hydraulic diagram

Symbol	Explanation	Symbol	Explanation
	Metering pump		Foot valve with filter meshes
	Injection valve		Level switch
	Multifunctional valve		Manometer

7.2 Installation, Electrical



WARNING!

ATEX pumps in areas at risk from explosion

- Only connect potential-free as well as non-isolating low voltage switch accessories, such as diaphragm rupture indicators, stroke rate instruments etc., to an intrinsically safe circuit in areas at risk from explosion.
- If several electrical components are connected together, the safety of the entire connected system has to be tested and confirmed in terms of its safety. This can either be in the form of a declaration of conformity from the supplier (ProMinent) for the entire unit or, with the supply of individual components, with the operator's explosion protection document.
- Only motor protection switches, mains switches and fuses permitted for use in areas at risk from explosion in line with the manufacturer's information may be used as electrical components in areas at risk from explosion.
- Electrically connect the entire electrical units listed on the earthing diagram cleanly and permanently to an electrically clean earthing point, - e.g. with an earthing bar on your system.
- Electrically connect the electrical units fitted with a potential equalisation cable to each other, cleanly and permanently to an electrically clean potential equalisation point - e.g. with a potential equalisation bar on your system.
- Note the enclosed documentation for the individual electrical components.
- Please note the relevant national regulations during installation!



WARNING!

Danger of electric shock

Unprofessional installation may lead to electric shocks.

- Crimp cable end sleeves onto all shortened cable cores.
- Only technically trained personnel are authorised to undertake the electrical installation of the device.



WARNING!

Danger of electric shock

In the event of an electrical accident, it must be possible to quickly disconnect the pump, and any electrical ancillaries which may possibly be present, from the mains.

- Install an emergency cut-off switch in the mains supply line to the pump and any electrical ancillaries which may be present or
- Integrate the pump and electrical ancillaries which may be present in the emergency cut-off management of the system and inform personnel of the isolating option.



WARNING!

Danger of electric shock

This pump is equipped with a protective earth conductor, to reduce the risk arising from an electric shock.

- Connect the PE conductor to "earth" with a clean and permanent electrical connection.

WARNING!

Danger of electric shock

A mains voltage may exist inside the motor or electrical ancillaries.

– If the housing of the motor or electrical ancillaries has been damaged, you must disconnect it from the mains immediately. The pump must only be returned to service after an authorised repair.

What requires electrical installation?

- Motor
- External fan (identity code option)
- Frequency converter (identity code option)
- Stroke control drive (identity code option)
- Stroke actuator (identity code option)
- Diaphragm rupture sensor (standard)
- Stroke sensor (identity code option)
- Heating cartridge (identity code option)
- Protective temperature limiter (identity code option)
- Earthing wires (to be installed by the site operator, compulsory in the area at risk from explosion)
- Potential equalisation line (to be provided on site, prescribed in the area at risk from explosion)

Motor

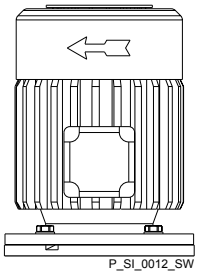

Fig. 14: Direction of rotation of motor

WARNING!

ATEX pumps in areas at risk from explosion

– Use a suitable motor protection switch to protect power end motors. Use motor protection approved for this application with Ex"e" motors. (Protection against warming caused by overloading).
– Provide a time-delay residual current device.
– Ensure that motors are only installed and checked by a "recognised competent" person in areas at risk from explosion.
– Cleanly earth the motor via the mains cable.
– Observe the enclosed operating instructions for the Ex motor, especially the maintenance plan.

WARNING!

Only motors with a frequency converter: Danger of electric shock

On conducting parts of the motor with an integrated frequency converter and on the lines themselves, there remains a risk of an electric shock for 3 minutes after switching off the mains voltage.

– After switching off allow the device to stand for 3 minutes before opening the terminal box.

CAUTION!

The motor can be damaged

Provide appropriate motor protection devices (e.g. motor protection switch with thermal overcurrent trip) to protect the motor against overloading. Fuses do not provide motor protection.

CAUTION!

Only motors with a frequency converter: The motor can be damaged

If a motor with an integrated frequency converter is restarted within 3 minutes of switching off of the mains voltage, the input current limiter could be damaged.

- After switching off, allow the device to stand for at least 3 minutes before restarting.
- If the motor is controlled via a control, take this into consideration at the control.

CAUTION!

Pump can be damaged

The pump can be damaged if the motor drives the pump in the wrong direction.

- Note the correct direction of rotation indicated by the arrow on the fan cover when connecting the motor, as shown in *'Motor' on page 30*.

Use an electrical isolating device in the mains supply cable, such as a mains switch, to be able to switch off the pump independently from the entire installation (e.g. for repairs).

1. Install a motor protection switch, as the motors have no fuse.
2. Install an emergency cut-off switch or include the motor in the emergency cut-off management of the system.
3. Only connect the motor to the power supply using a suitable cable.

- *Key motor data can be found on the nameplate and in the Chapter "Technical data".*
- *The terminal wiring diagram is located in the terminal box.*

Motor data sheets, special motors, special motor flanges, external fan, temperature monitoring

- *Further information on motors can be found on our website www.prominent.com.*
- *Motor data sheets can also be requested for the motors.*
- *With motors other than those with identity code specifications "S", "M" or "N": Pay special attention to the operating instructions for the motors.*
- *Special motors or special motor flanges are possible on request.*

External fan

CAUTION!

Provide a separate power supply for the external fan with motors with external fans (identity code specification "R" or "Z").

Variable speed motors with frequency converter

Connect the motor as per the wiring diagram for the controller, if it is controlled by an electronic control unit (such as direct current motors by a frequency converter).

Stroke length actuators / control power ends

Connect the motors in accordance with the enclosed wiring diagram or as per the wiring diagram fixed to the inside of the housing.

CAUTION!

Only operate stroke length actuators / control drives when the pump is running!

Otherwise they will become damaged.

Diaphragm rupture sensor (Option)

WARNING!

Danger of electric shock

In event of a defect, there is a risk of electric shock when conductive feed chemical are used.

– For safety reasons we recommend connecting to a protective low voltage, e.g. in accordance with EN 60335-1 (SELV).

WARNING!

Risk of fire after a diaphragm rupture

The electric diaphragm rupture sensor must switch off the pump immediately after a diaphragm rupture.

– Connect the pump and the diaphragm rupture sensor to a control so that the pump is stopped immediately in the event of a diaphragm rupture.

CAUTION!

Danger resulting from unnoticed diaphragm rupture

If the pump has been ordered with an electric diaphragm rupture sensor, it must also be electrically installed.

– Install the enclosed diaphragm rupture sensor electrically to a suitable monitoring device.

CAUTION!

Additional damage with a ruptured diaphragm

The diaphragm cannot be allowed to rupture fully if damage can be caused by hydraulic oil mixing with the feed chemical.

– The diaphragm rupture sensor must switch off the pump immediately.
  Only restart the pump once the diaphragm has been replaced.

a) Diaphragm rupture sensor with switch contact



– *The cable can be connected as required.*

b) Namur sensor, inherently safe

The monitor / power supply installed by the customer must be able to evaluate the current variations of the Namur sensor for indicating a diaphragm rupture!



WARNING!

In the area at risk from explosion:

– For the Namur sensor NJ1,5-8GM-N, also note the details of the type examination certificate PTB 00 ATEX 2048 X.

When using combustible media:



WARNING!

Risk of fire after a diaphragm rupture

The electric diaphragm rupture sensor must switch off the pump immediately after a diaphragm rupture.

– Connect the pump and the diaphragm rupture sensor to a control so that the pump is stopped immediately in the event of a diaphragm rupture.

Stroke sensor (optional)

→ Connect the stroke sensor to a suitable monitoring device according to the details in the chapter "Technical Data" - also observe their technical data!

The monitor / power supply installed by the customer must be able to evaluate the current variations of the Namur sensor for indicating a diaphragm rupture!



WARNING!

In the area at risk from explosion:

– For the Namur sensor NJ1,5-8GM-N, also note the details of the type examination certificate PTB 00 ATEX 2048 X.

Heating cartridge

→ Install the heating cartridge according to its documentation. It must only be connected to the supplied power supply or the protective temperature limiter (for ATEX)!

Earthing wires (mandatory for ATEX)

Connect the electrical components of the entire installation supplied cleanly and permanently to an electrically clean earthing point, e.g. with an earthing bar on site - see earthing diagrams in the appendix.

Potential equalisation lines (mandatory with ATEX)

The entire installation supplied is provided ex works with the necessary potential equalisation lines. Electrically connect an additional potential equalisation cable from the potential equalisation cables from this system cleanly and permanently to an electrically clean potential equalisation point, e.g. to a potential equalisation bar on site.

Other units

→ Install the other units in line with their documentation.

8 Start up and operation

Safety information



WARNING!

ATEX pumps in areas at risk from explosion

– Make sure that a suitably competent person checks whether the appropriate installation information from the "Installation " chapter has been implemented correctly.
– A "recognised competent person" must check the electrical installation and in particular the intrinsically safe electric circuit.
– Set the opening pressure of the relief valve at a maximum of no more than 1.5 times the rated pressure of the pump.



WARNING!

Fire hazard with flammable media

Only with combustible media: These may start to burn when combined with oxygen.

– During filling and draining of the liquid end, an expert must ensure that feed chemical does not come into contact with oxygen.



WARNING!

Hot surface

In event the power end motor is loaded excessively, its surface may become very hot.

– Avoid contact.
– If necessary, mount a guard plate.



WARNING!

Risk of burns with hot feed chemicals

If hot feed chemicals can heat the liquid ends above the permissible surface temperatures, persons can suffer burns from them.

– Consider attaching a "Hot surface" label to the liquid end or ...
– fitting a guard plate.



WARNING!

Only motors with a frequency converter: Danger of electric shock

On conducting parts of the motor with an integrated frequency converter and on the lines themselves, there remains a risk of an electric shock for 3 minutes after switching off the mains voltage.

– After switching off allow the device to stand for 3 minutes before opening the terminal box.

CAUTION!

Only motors with a frequency converter: The motor can be damaged

If a motor with an integrated frequency converter is restarted within 3 minutes of switching off of the mains voltage, the input current limiter could be damaged.

– After switching off, allow the device to stand for at least 3 minutes before restarting.

CAUTION!

Feed chemical could escape

– Check suction and discharge lines, and liquid end with valves for leak-tightness and tighten if necessary.
– Check whether the necessary flushing pipes or bleed lines are connected.

CAUTION!

Prior to commissioning, check that the power end motor and corresponding ancillary equipment is connected in compliance with the regulations.

CAUTION!

When using pumps with speed control, observe the instructions in the frequency converter operating instructions.

Observe the technical data

CAUTION!

Danger of material damage

Observe the details in the chapter "Technical Data" (pressure, viscosity, resistance, ...).

Test the diaphragm rupture sensor

CAUTION!

Feed chemical can escape unnoticed

If the diaphragm rupture sensor does not stop the pump or no alarm is triggered, feed chemical can escape unnoticed.

– Trigger the diaphragm rupture indicator - see chapter "Repairs" and in so doing check the reaction of the analysis unit.

CAUTION!

Only restart the pump once the diaphragm has been replaced after a diaphragm rupture if damage can be caused by hydraulic oil mixing with the feed chemical.

Pressure relief valve

CAUTION!
The pressure relief valve must not be adjusted.

Checking the direction of rotation

When commissioning the unit, check whether the drive motor is rotating correctly - check this against the arrow on the motor housing or the diagram in the chapter entitled "Electrical Installation."

WARNING!
Risk of injury from the fan impeller
The fan impeller beneath motor's fan cowling can cause severe injuries while it is turning.

– The pump must only be connected to the mains voltage with the fan cowling closed.

Installing a vent screw

Replace the sealing screw at the oil filler neck with the supplied vent screw - see chapter "Overview of equipment and control elements".

On a new product, slight oil marks on the pump do not indicate leaks.

– *Wipe away and note down oil positions. Only contact the supplier if it reoccurs.*

Use a safety relief valve

CAUTION!
Danger due to incorrect use of the safety relief valve
The safety relief valve can only protect the motor and the gear, only against illegal positive pressure that is monitored by the metering pump itself. It cannot protect the system against positive pressure.

– Protect the motor and gear of the system against positive pressure using other mechanisms.
– Protect the system against illegal positive pressure using other mechanisms.

The real opening pressure lies above the nominal pressure (the pressure stage) – see chap. “Technical Data”.

Checking the oil level

When the pump is idle, check whether the oil level in the pump is in the middle of the oil level indicator.

This will rule out the pump losing oil and suffering damage.

Avoid particles

For chemicals with a particle size greater than 0.3 mm, the valves may no longer close properly.

– *Install a suitable filter in the suction line.*

adjust the relief valve

Only in the area at risk from explosion: Set the opening pressure of the relief valve at a maximum of no more than 1.5 times the rated pump pressure .

Only with a heating cartridge: check the action of the heating cartridge

Check the heating action of the heating cartridge and effectiveness of the protective temperature limiter. No overheating must occur, especially in the area at risk from explosion!

Only at low temperatures: allow the pump to warm up

1. Switch on the heating cartridge, set the stroke length of the pump to "0" and start the pump.
2. Allow the pump to warm up for 5 minutes.
3. Set the stroke length of the pump to the required value.

Earthing wires

Check whether the earthing lines in the pump's electrical units are correctly connected and connected to a clean earth wire - see earthing diagrams in the appendix.

Potential equalisation lines (mandatory with ATEX)

Check whether the potential equalisation lines are sitting correctly on the pump and connected to a clean potential equalisation point.

8.1 Bleeding the liquid end

When bleeding the liquid end or suction against pressure:

Relieve the suction and discharge line from pressure!

With dangerous or unknown feed chemicals, take suitable protective measures according to the safety data sheet!

1. Loosen the discharge line.
2. Install a piece of translucent hose.
3. Run the pump slowly until the feed chemical appears in the piece of hose.
4. Remove the piece of hose.
5. Mount the discharge line.

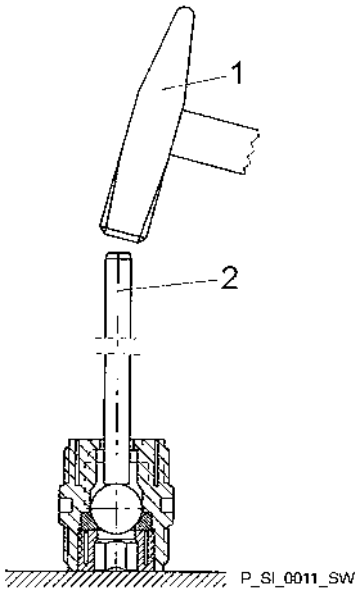

Fig. 15: Tapping the valve set disc

Eliminating suction problems (only for single ball valves with PTFE ball seat)

For suction problems occurring during start up:

- *Exclude the possibility that there are foreign bodies in the valve.*
- *Place the valve on a stable surface.*
- *Using a hammer (1) and a brass bar (2), gently tap the PTFE ball seat above the valve ball - see figure below.*
- *Then with the valve in a damp condition allow it to prime.*

8.2 Calibrate the stroke control drive (Option)

The stroke control drive is calibrated to the ordered dosing rate ex-factory. In event that you want the stroke control drive to be calibrated to another dosing rate, please contact ProMinent.

9 Maintenance

Safety information

WARNING!

ATEX pumps in areas at risk from explosion

- Generally check the proper functioning of the system, particularly of the power end and bearings, by regular monitoring (for leaks, noises, temperatures, smell ....).
- Do not allow the pump to run hot due to a lack of oil. With lubricated metering pumps, regularly check for the presence of lubricant, for example by checking the liquid level, visual leak control etc. If oil is leaking, examine the leakage point immediately and eliminate the cause.
- Check the correct operation of the relief valve downstream of the pump. In premises at risk from explosion, the relief valve should prevent the gear from becoming overloaded and becoming hot.
- Observe the enclosed operating instructions for the Ex motor.
- Only with pumps with a motor flange: replace worn gear ring etc. of the clutch.
- Only with add-on power end: replace worn gear ring/DZ element of the clutch.
- Check the seals of the pressure switch for leak-tightness.
- When cleaning plastic components, ensure that no electrostatic charges are generated by excessive friction. - see warning label.
- Replace wear parts, such as bearings, when there is an identifiable incidence of unacceptable wear. (The nominal service life cannot be calculated with lubricated bearings.)
- Only use genuine spare parts as replacements.
- A diagnostic device for bearing damage is very useful for the premature detection of bearing damage.
- Carry out tests and repair in compliance with DIN EN IEC 60079-17 and ensure that they are only performed by "experienced personnel with the requisite knowledge".
- These measures are deemed to be minimum protection measures by ProMinent. It is the duty of the operator to take appropriate measures to eliminate any further hazards known to him.

WARNING!

ATEX pump in area at risk from explosion

Static electricity can cause ignition sparks.

- Always earth the discharge and suction lines first before working on the pump.

WARNING!

Fire hazard with flammable media

Only with combustible media: These may start to burn when combined with oxygen.

- During filling and draining of the liquid end, an expert must ensure that feed chemical does not come into contact with oxygen.



WARNING!

It is mandatory that you read the safety information and specifications in the "Storage, Transport and Unpacking" chapter prior to shipping the pump.



CAUTION!

Warning of feed chemical spraying around

Feed chemical can spray out of the hydraulic components if they are manipulated or opened due to pressure in the liquid end and adjacent parts of the system.

- Disconnect the pump from the mains power supply and ensure that it cannot be switched on again by unauthorised persons.
- Depressurise the system before commencing any work on hydraulic parts.



WARNING!

Warning of dangerous or unknown feed chemical

Should a dangerous or unknown feed chemical be used: It may escape from the hydraulic components when working on the pump.

- Take appropriate protective measures before working on the pump (e.g. safety glasses, safety gloves, ...). Observe the safety data sheet for the feed chemical.
- Drain and flush the liquid end before working on the pump.



WARNING!

Danger of an electric shock

When working on the motor or electrical auxiliary equipment, there is a danger of an electric shock.

- Before working on the motor, take note of the safety instructions in its operating instructions!
- Should external fans, servomotors or other auxiliary equipment be installed, these should also be disconnected and checked that they are voltage free.



Under heavy loading (e.g. continuous operation) shorter maintenance intervals are recommended than those given.



Third party spare parts for the pumps may lead to problems when pumping.

- *Use only original spare parts.*
- *Use the correct spare parts kits. In the event of doubt, refer to the exploded views and ordering information in the appendix.*

Inspection, daily

Check the pump installation for.

- leaks
- Abnormal noises or squeaks
- Abnormal temperatures
- Abnormal odours
- Abnormal vibrations
- Other peculiarities



WARNING!

In areas at risk from explosion:

stop the pump immediately and rectify these peculiarities. ProMinent Services may be needed if required.

Maintenance work:

Interval	Maintenance work	Personnel
Quarterly*	■ ATEX pump only: Special maintenance work - refer to the "Safety information for ATEX pumps". ■ Only pumps with add-on power end or "without motor" and/or with motor flange: Check the gear ring/DZ element of the ROTEX® coupling as per their manual. Open the inspection window on the flange to check. Re-close it! If the coupling is OK, the maintenance interval can be increased to 4000 hours. ■ If the coupling is not clearly OK: Call the ProMinent Service.	Technical personnel
	ATEX pump only: Check the seals of the EDS 4448 pressure switch at regular intervals (depending on the climatic conditions and the feed chemical) in respect of their serviceability and replace if necessary.	Technical personnel
	Check the correct seating and state of the metering lines at both discharge and suction ends.	Technical personnel
	Check that the suction valve and discharge valve are fitted tightly.	Technical personnel
	Check whether the diaphragm rupture sensor stops the pump or generates an alarm after it is triggered, see the chapter "Repairs".	Technical personnel
	Check for firm seating of the diaphragm rupture sensor.	Technical personnel
	Check whether the overpressure signalling triggers when an overpressure exists.	Technical personnel
	Check the secure seating of the overpressure signaller.	Technical personnel
	Check the secure seating of the pressure limitation valve (50 Nm).	Technical personnel
	With the pump running, check whether bubbles rise in the window of the bleed valve.	Technical personnel
	Check that the flow is correct: Allow the pump to prime briefly.	Technical personnel
	Check the tightness of the entire liquid end - particularly around the leakage hole!	Technical personnel
	Check that the dosing head screws are tight.	Technical personnel
	Check that the electrical connections are intact.	Electrician Electrical technician with additional explosion protection qualification
	Check the firm, clean electrical connection of the earthing wires.	Electrician Electrical technician with additional explosion protection qualification
	Check the firm, clean electrical connection of the potential equalisation wires.	Electrician Electrical technician with additional explosion protection qualification
	Check the oil level.	Technical personnel
After approx. 4,000 operating hours	Check the gear ring/DZ element of the coupling as per their operating instructions.	Technical personnel
After approx. 5,000 operating hours	Change hydraulic oil - refer to "Changing hydraulic oil" in this chapter.	Instructed personnel
	Check whether the seals of the overpressure signalling system are OK and in case of doubt, replace.	Technical personnel
	ATEX design only: Check the effectiveness of the protective temperature limiter for the heating cartridge.	Technical personnel

Interval	Maintenance work	Personnel
	ATEX design only: Arrange for immediate rectification of any outwardly apparent damage or corrosion on parts of the housing and on connecting parts of the heating cartridge or protective temperature limiter by the manufacturer using original spare parts.	Customer Service department
After approx. 10,000 operating hours **	Diaphragm change - refer to "Diaphragm change" in the chapter "Repair".	Technical personnel
After approx. 20,000 operating hours	Follow the motor manufacturer's recommendations - see operating instructions for the motor.	

* Under normal loading (approx. 30% of continuous operation).

Under heavy loading (e.g. continuous operation): Shorter intervals.

** under normal loading. With very unfavourable metering parameters: Shorter intervals.

Hydraulic oil change



WARNING!

Risk of burns due to hot hydraulic oil

The hydraulic oil may become very hot when the pump is exposed to extensive loading.

– When draining oil, avoid contact with the oil running out.



WARNING!

If the pump must be operated using hydraulic oil compatible with foodstuffs, then only foodsafe hydraulic oil must be used.

Drain the hydraulic oil

For the double-head versions, perform the following work simultaneously on both dosing heads.

1. Set the stroke adjustment dial (2) to "0".
2. Unscrew the gearbox vent stopper (3).
3. Place an oil trough under the oil drainage plug (5).
4. Unscrew the oil drainage plug (5) from the power end housing.
5. Allow the hydraulic oil to run out of the drive.
6. Place an oil trough under the hydraulic end.
7. Unscrew the oil drainage stopper (4) out of the hydraulic end.
8. Allow the hydraulic oil to run out of the hydraulic end.
9. Screw on the oil drain plug (5).
10. Screw in the oil drainage stopper (4) with a new seal.

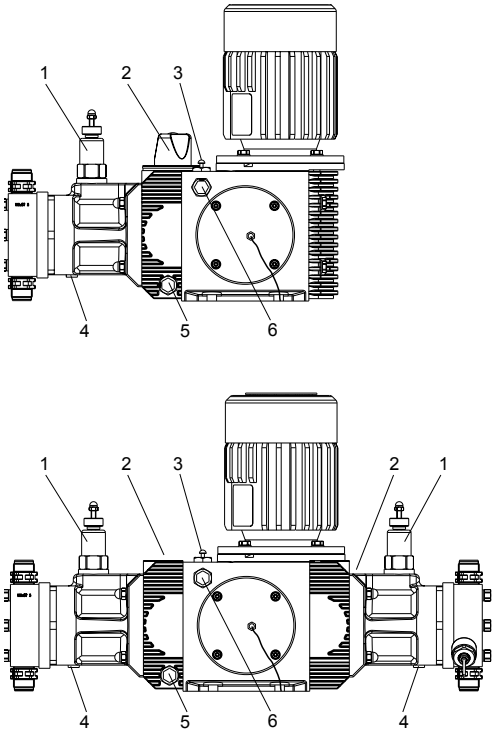

Fig. 16

Fill with hydraulic oil

For the double-head versions, perform the following work simultaneously on both dosing heads.

1. Set the stroke adjustment knob (2) to "100%" and open the safety relief valve (1) - tighten the knurled screw.
2. Slowly fill hydraulic oil through the opening for the gearbox vent stopper (3) until the oil inspection window (6) is covered.

Type	Level of covering
HP2	1/3
HP3	1/3

3. Start the pump.
4. Allow the pump to run for a further 1... 2 minutes.
5. Top up with hydraulic oil if necessary.
6. Screw the gearbox vent stopper (3) back in. Do not close the bleed valve!
7. Close the safety relief valve (1) - loosen the knurled screw.
8. Check whether these whole openings are tightly sealed again, especially in the area at risk from explosion.

WARNING!
Only in areas at risk from explosion: Check after 1 day whether the oil drainage stopper (4) and the oil drainage plug (5) are still tight.

10 Repairs

Safety information



WARNING!

ATEX pumps in the ATEX area

– Generally check the proper functioning of the system, particularly of the power end and bearings, by regular monitoring (for leaks, noises, temperatures, smell ....).



WARNING!

ATEX pump in area at risk from explosion

Static electricity can cause ignition sparks.

– Always earth the discharge and suction lines first before working on the pump.



WARNING!

Fire hazard with flammable media

Only with combustible media: These may start to burn when combined with oxygen.

– During filling and draining of the liquid end, an expert must ensure that feed chemical does not come into contact with oxygen.



WARNING!

It is mandatory that you read the safety information and specifications in the "Storage, Transport and Unpacking" chapter prior to shipping the pump.



CAUTION!

Warning of feed chemical spraying around

Feed chemical can spray out of the hydraulic components if they are manipulated or opened due to pressure in the liquid end and adjacent parts of the system.

– Disconnect the pump from the mains power supply and ensure that it cannot be switched on again by unauthorised persons.
– Depressurise the system before commencing any work on hydraulic parts.



WARNING!

Warning of dangerous or unknown feed chemical

Should a dangerous or unknown feed chemical be used: It may escape from the hydraulic components when working on the pump.

– Take appropriate protective measures before working on the pump (e.g. safety glasses, safety gloves, ...). Observe the safety data sheet for the feed chemical.
– Drain and flush the liquid end before working on the pump.



WARNING!

Risk of fingers being crushed

Under unfavourable conditions, the stroke axle or displacement body can cause crushing of the fingers.

– Disconnect the pump from the mains power supply and ensure that it cannot be switched on again by unauthorised persons.



WARNING!

Risk of injury from the fan impeller

The fan impeller beneath motor's fan cowling can cause severe injuries while it is turning.

– The pump must only be connected to the mains voltage with the fan cowling closed.



WARNING!

Hot oil and hot components

The hydraulic oil and the hydraulic end may become very hot when the pump is exposed to heavy loading.

– Allow the pump to cool before starting work.



Unsuitable spare parts for the valves may lead to problems for the pumps.

– *Only use new components that are especially adapted to fit your valve (both in terms of shape and chemical resistance).*
– *Use the correct spare parts kits. If in doubt, refer to the exploded drawings and ordering information on our website www.prominent.com or - if included - the "Supplementary CD for Operating Instructions".*



Unsuitable spare parts for the valves may lead to problems for the pumps.

– *Only use new components that are especially adapted to fit your valve (both in terms of shape and chemical resistance).*
– *Use the correct spare parts kits. In the event of doubt, refer to the exploded views and ordering information in the appendix.*

10.1 Cleaning valves



Clean the discharge and suction valves only one after another as they cannot be differentiated using the arrow markings.

For orientation: Should you have a dismantled liquid end in front of you, the suction valve is on the side of the diaphragm rupture sensor.

Personnel: ■ Technical personnel

Cleaning a discharge valve (double ball)

Taking the discharge valve apart

1. Loosen the discharge line.
2. Unscrew the discharge valve from the dosing head and rinse out.
3. Remove the remaining parts from the dosing head.
4. Allow the parts from the valve body (1) to fall as far as possible.
5. Using an Allen key or similar, insert it through the hole of the valve body (1) and push the remaining parts out of it.
6. Remove the last seal (2) and the last ball seat (3) from the valve body (1) using a small screwdriver.
7. Rinse and clean all parts.
8. Replace the worn parts and seals.

Assembling the discharge valve

When assembling, take note of the orientation of the valve seats (3). The valve seats (3) are used as a ball seat on the fine machined side and as a ball cage and spring guide on the other side. The fine machined side must point in the flow direction with all valve seats.

When assembling the valves, take note of the sequence:

Teflon – Metal – Teflon – Metal - ...

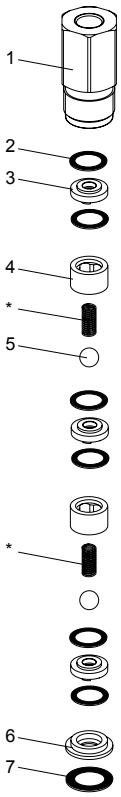

Fig. 17

1. Slide into the valve body (1) one after another:
   - one seal (2) and one valve seat (3) - correct!
   - one seal (2) and one valve bushing (4)
   - (If fitted: allow one spring (*) to slide into the spring guide of the valve seat (3)
   - slide one ball (5) into the valve body (1)
   - one seal (2) and the second valve seat (3, correct!)
   - one seal (2) and the second valve bushing (4)
   - (If fitted: allow the second spring (*) to slide into the spring guide of the valve seat (3)
   - slide the second ball (5) into the valve body (1)
   - one seal (2), the third valve seat (3) - (correct!) and a further seal (2)
2. Position the insert disc (6) with the flare on the packing.

   The distance between the edge of the valve body and the insert disk (6) is due to the construction.
3. Place the larger seal (7) between the insert disk (6) and the dosing head.
4. Screw in the valve until the stop.
5. Fix the discharge line.

Cleaning a suction valve (double ball)

A suction valve is dismantled, cleaned and assembled in the same way as a discharge valve.

Please note, however, that when assembling, the valve seat (3) must be aligned in the other direction. The fine machined side must point in the flow direction with all valve seats (3).

10.2 Replacing the diaphragm

Important note

WARNING!
Observe the safety information at the beginning of the chapter.

CAUTION!
A diaphragm rupture may remain unnoticed
Should the multi-layer diaphragm be treated incorrectly, diaphragm rupture signalling may fail.

- Take the multi-layer diaphragm from the packaging immediately before installing.
- No impurities must contact the multi-layer diaphragm.
- Do not "inspect" the insert disc.

For the double-head versions and add-on power ends, perform the following work simultaneously on both dosing heads.

Drain the hydraulic oil from the hydraulic end

Position numbers - see chapter "Maintenance"

1. Turn the stroke adjustment dial (2) more than 100% to the stop.
2. Unscrew the gearbox vent stopper (3).
3. Place an oil trough under the hydraulic end.
4. Unscrew the oil drainage stopper (4) out of the hydraulic end.
5. Allow the hydraulic oil to run out of the hydraulic end.
6. Screw in the oil drainage stopper (4) with a new seal.

Changing the diaphragm for HP2 and HP3

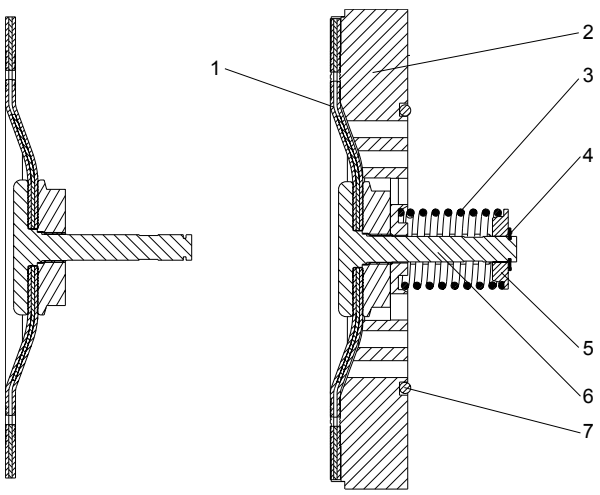

Fig. 18

1. Depressurise the suction and discharge lines.
2. Unscrew the suction and discharge lines from the liquid end. Is the hydraulic oil drained - see above?
3. Remove the liquid end with the dosing head screws from the hydraulic end.
4. Release the diaphragm mounting plate (2) with diaphragm (1) from the dosing head.
5. **WARNING!**
   Warning of injury to eyes
   The spring (3) and the spring plate (5) on the diaphragm core (6) may spring away when loosening the safety collar (4).
   – Wear safety glasses.

   Release the safety collar (4) and the spring (3) with the spring plate (5) from the diaphragm core
6. Release the safety collar (4).
7. Pull the spring (3) with the spring collar (5) from the diaphragm anchor.
8. Remove the diaphragm / diaphragm anchor combination from the diaphragm mounting plate (2).
9. Place the new diaphragm / diaphragm anchor combination into the diaphragm mounting plate (2).
10. Push the diaphragm spring (3) with the spring collar (5) on to the diaphragm anchor (6).
11. Secure the spring collar (5) using the safety collar (4).
12. Replace the O-ring (7) between the diaphragm mounting plate (2) and the hydraulic end.
13. Place the diaphragm (1) with the diaphragm mounting plate (2) inside the hydraulic end.
14. Position the dosing head with the screws so that the suction connector is pointing downwards - diaphragm sensor must be at the bottom.
15. First gently tighten the dosing head screws and then tighten crosswise, tightening torque - *'Tightening torque for screws' on page 51*.
16. Test the diaphragm rupture sensor - see *'Changing the diaphragm for HP2 and HP3' on page 49*
17. Screw the suction and discharge line on to the liquid end.

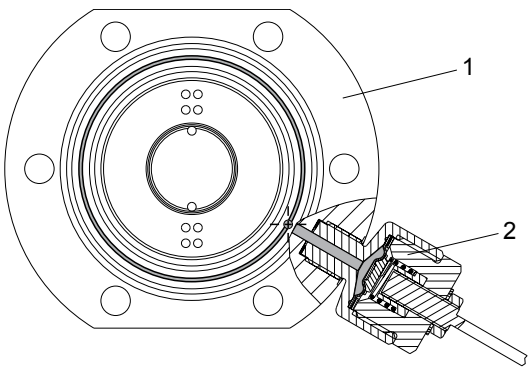

Fig. 19: Wetted areas (grey shaded)

Tightening torque for screws

Dosing head material	Tightening torque
PVT	12 Nm
TTT	12 Nm
HCT	20 Nm
SST	20 Nm

Fill hydraulic oil in the hydraulic end

For the double-head versions, perform the following work simultaneously on both dosing heads.

1. Set the stroke adjustment dial (1) to "100%" and open the safety relief valve (2) - tighten the knurled screw.
2. Slowly fill hydraulic oil through the opening for the gearbox vent stopper (4) until the oil inspection window (3) is covered to 1/3.
3. Start up the pump.
4. Allow the pump to run for 1... 2 minutes.
5. Screw the gearbox vent stopper (3) back in. Do not close the bleed valve!
6. Close the safety relief valve (1) - loosen the knurled screw.
7. Check the pump for tightness by using maximum back pressure.

Check the tightening torque of the dosing head screws again after 24-hours of operation!

10.3 Repair the diaphragm rupture sensor

WARNING!

Warning of feed chemical

After diaphragm rupture, additional feed chemical will be present in the diaphragm rupture sensor and the inlet channel in the dosing head!

– If using hazardous or unknown feed chemicals then protect yourself against the feed chemical. Observe the safety data sheet.

30 V version

Check diaphragm rupture sensor

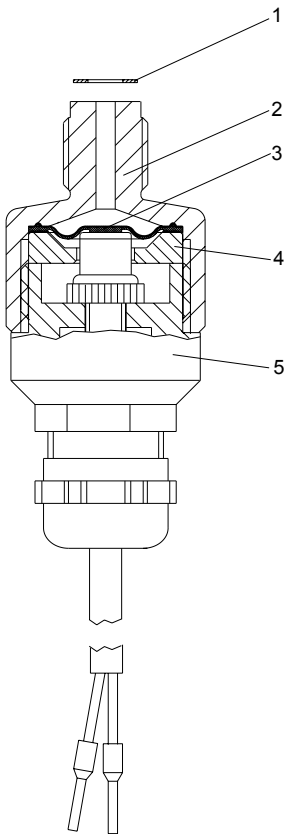

Fig. 20

1. When changing the diaphragm, unscrew the diaphragm rupture sensor from the dosing head.
2. Check for electrical continuity:
3. Using a blunt insulating probe (Ø 2 ... 3 mm, no sharp edges), press into the channel of the diaphragm rupture sensor.
   ⇨ Check that there is no electrical continuity
4. Release the pin again.
   ⇨ Electrical continuity must be re-established.
5. Repeat the test several times.
6. If everything is working correctly, screw the diaphragm rupture sensor into the dosing head with a new seal (1).
7. If not, go to the next section.

Replace separating diaphragm of the diaphragm rupture sensor

1. Disconnect the diaphragm rupture sensor from the power supply.
2. When changing the diaphragm, unscrew the diaphragm rupture sensor from the dosing head.
3. Grasp the upper section (2) of the diaphragm rupture sensor.
4. Hold the body (5) in place with an open-ended spanner.
5. Unscrew the top of the diaphragm rupture sensor.
6. Clean the soiled parts.
7. Lay the new separating diaphragm (3) with the light side (PTFE) down into the upper section (2).
8. Lay the plate (4) with the uneven side down into the upper section (2).
9. Screw the body (5) into the upper section and screw tighten.
10. Check the diaphragm rupture sensor as described in “Check diaphragm rupture sensor".
11. If the diaphragm rupture sensor does not operate clearly and reliably, then a new diaphragm rupture sensor must be used without fail.

ATEX version

Checking the diaphragm rupture sensor

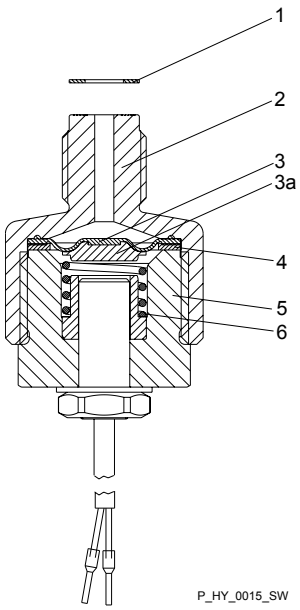

Fig. 21

1. When changing the diaphragm, unscrew the diaphragm rupture sensor from the dosing head.
2. Check that the monitor does not indicate a diaphragm rupture:
3. Using a blunt insulating probe (Ø 2 ... 3 mm, no sharp edges), press into the channel of the diaphragm rupture sensor.
   ⇨ The monitor device should indicate a diaphragm rupture.
4. Release the pin again.
   ⇨ The monitor device should no longer indicate a diaphragm rupture.
5. Repeat the test several times.
6. If everything is working correctly, screw the diaphragm rupture sensor into the dosing head with a new seal (1).
7. If not, go to the next section.

Replace the separating diaphragm of the diaphragm rupture sensor

1. Disconnect the diaphragm rupture sensor from the monitor.
2. When changing the diaphragm, unscrew the diaphragm rupture sensor from the dosing head.
3. Grasp the top part (2) of the diaphragm rupture sensor.

Do not tamper with the lacquer-protected nut.

4. Hold the body (5) in place with an open-ended spanner.
5. Unscrew the top of the diaphragm rupture sensor.
6. Clean any dirty parts.
7. Lay the new separating diaphragm (3) with the light side (PTFE) down into the top part (2).
8. Place the disc (4) in the top part (2).
9. Place the spring into the body (5).
10. Move the body (5) close to the top part (2).
    ⇨ The spring (6) should sit correctly on the spring seat (3a).
11. Screw the body (5) into the top part and tighten.
12. Connect the diaphragm rupture sensor back to the monitor.
13. Check the diaphragm rupture sensor as described under “Checking diaphragm rupture sensor".
14. If the diaphragm rupture sensor does not operate clearly and reliably, then definitively use a new diaphragm rupture sensor.

10.4 Calibrating the dosing rate

It is only worth calibrating the dosing rate if you wish to carry out particularly precise metering at a completely different back pressure.

The dosing rate of the hydraulic diaphragm metering pump is only dependent upon back pressure to a minimal extent. And the pumps are calibrated on the factory premises to the maximum operating pressure. (Values of the maximum operating pressures - see the pressure stage on the indicating dial or safety relief valve).

The plant or production facility can calibrate each pump to a back pressure that is lower than the nominal pressure ordered.

The following pressure stages (in bar) are available:

Pump	10	16	25	40	64	100
HP2, HP3	X	X	X	X	X	X

WARNING!
ATEX pump only: Take suitable precautions in potentially explosive atmospheres regarding the feed chemical in the open measuring cylinder - see handling instructions below.

The dosing rate can only be calibrated when the discharge line is connected and under normal operating conditions. As the dosing rate is dependent upon the actual back pressure.

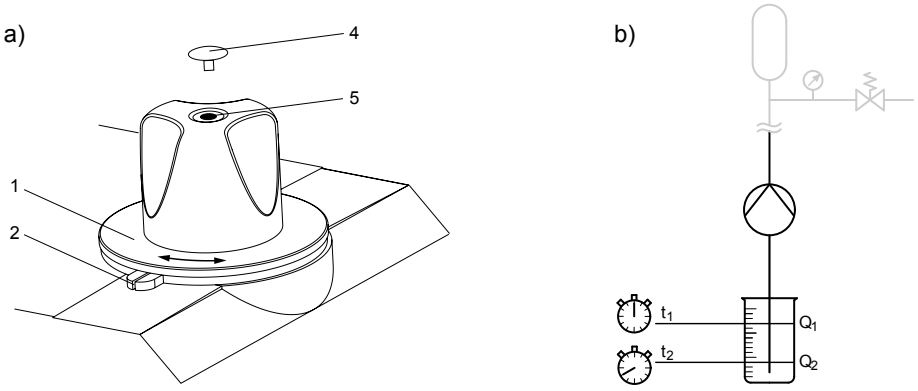

Fig. 22: a) Adjust indicating dial, b) Schematic assembly for calibration

Materials required:

- Measuring beaker
- Stop watch

1. Switch off the pump.
2. Turn the stroke adjustment dial to maximum, beyond 100% to the stop.
3. API versions only: Remove the metal cap from the stroke adjustment dial.
4. Remove the cover (4) from the stroke adjustment dial and slacken off the screw (3) beneath slightly.
5. Guide the suction line into a measuring beaker - see Fig. 22.
6. Fill the measuring beaker with feed chemical.
7. Start the pump.
8. As soon as the system back pressure of the system has been reached, determine the fill level Q_1 and start the stopwatch.
9. Run the pump for a while.
10. Simultaneously determine the fill level Q_2 and stop the stopwatch.
11. Calculate the dosing rate value.
12. Reduce the dosing rate using the stroke adjustment dial and repeat steps 7 to 10 until the required value is reached.

13. Turn the indicating dial (1) only until the 100% marking is precisely above the indicating slot (2).
14. Carefully tighten the screw (3) in the stroke adjustment dial and replace the cap (4).
15. API versions only: Press the metal cap on to the stroke adjustment dial.

11 Troubleshooting

Safety information



WARNING!

ATEX pumps in the ATEX area

- Generally ensure proper functioning (no leaks, unusual noises, high temperatures, unusual smell ...) especially of the power end/drive and the bearings.
- Do not allow the pump to heat up because of lack of oil. With lubricated metering pumps, regularly check for the presence of lubricant, for example by checking the liquid level, visual leak control etc. If oil is leaking, examine the leakage point immediately and eliminate the cause.
- When cleaning plastic components, ensure that no electrostatic charges are generated by excessive friction. - see warning label.
- Replace wear parts, such as bearings, when there is an identifiable incidence of unacceptable wear. (The nominal service life cannot be calculated with lubricated bearings.)
- Only use genuine spare parts as replacements.
- Carry out tests and repair in compliance with DIN EN IEC 60079-17 and ensure that they are only performed by "experienced personnel with the requisite knowledge".
- Make sure that a "recognised competent person" checks the electrical installation and in particular the intrinsically safe electric circuits.



WARNING!

ATEX pump in area at risk from explosion

Static electricity can cause ignition sparks.

- Always earth the discharge and suction lines first before working on the pump.



WARNING!

Fire hazard with flammable media

Only with combustible media: These may start to burn when combined with oxygen.

- During filling and draining of the liquid end, an expert must ensure that feed chemical does not come into contact with oxygen.



WARNING!

Danger of an electric shock

Personnel working on electrical parts can be electrocuted if all electrical lines carrying current have not been disconnected.

- Disconnect the supply cable before working on the motor and prevent it from being reconnected accidentally.
- Any separately driven fans, servo motors, speed controllers or diaphragm rupture sensors fitted should also be disconnected.
- Check that the supply cables are de-energised.



WARNING!

Warning of dangerous or unknown feed chemical

Should a dangerous or unknown feed chemical be used: It may escape from the hydraulic components when working on the pump.

– Take appropriate protective measures before working on the pump (e.g. safety glasses, safety gloves, ...). Observe the safety data sheet for the feed chemical.
– Drain and flush the liquid end before working on the pump.



WARNING!

Risk of injury from the fan impeller

The fan impeller beneath motor's fan cowling can cause severe injuries while it is turning.

– The pump must only be connected to the mains voltage with the fan cowling closed.



WARNING!

Only motors with a frequency converter: Danger of electric shock

On conducting parts of the motor with an integrated frequency converter and on the lines themselves, there remains a risk of an electric shock for 3 minutes after switching off the mains voltage.

– After switching off allow the device to stand for 3 minutes before opening the terminal box.



CAUTION!

Only motors with a frequency converter: The motor can be damaged

If a motor with an integrated frequency converter is restarted within 3 minutes of switching off of the mains voltage, the input current limiter could be damaged.

– After switching off, allow the device to stand for at least 3 minutes before restarting.



CAUTION!

Danger of personnel injury and material damage

The use of untested third party parts can result in personnel injuries and material damage.

– Only fit parts to metering pumps, which have been tested and recommended by ProMinent.



CAUTION!

Warning of feed chemical spraying around

Feed chemical can spray out of the hydraulic components if they are manipulated or opened due to pressure in the liquid end and adjacent parts of the system.

– Disconnect the pump from the mains power supply and ensure that it cannot be switched on again by unauthorised persons.
– Depressurise the system before commencing any work on hydraulic parts.

Tasks

Fault description	Cause	Remedy	Personnel
Pump fails to pressurise or does not prime in despite full stroke motion and bleeding	The valves are dirty or worn.	Repair the valves - see chapter entitled "Repair".	Technical personnel
	The feed chemical has particles larger than 0.3 mm.	Install a suitable filter in the suction line.	Technical personnel
	Safety relief valve is open.	Unscrew knurled screw in safety relief valve.	Instructed personnel
	Safety relief valve is heavily worn as discharge line is greatly constricted.	Replace safety relief valve and remove blockage from discharge line	Technical personnel
	Insufficient hydraulic oil in the power end.	Refill with hydraulic oil until oil inspection window is 1/3 covered - see "Diaphragm change" in the chapter "Repair". Investigate and clear the cause of the oil loss.	Instructed personnel
	The oil inspection window is leaking.	Replace the oil inspection window as per the operating instructions.	Technical personnel
	Indicating dial is set incorrectly.	Set indicating dial - see "Calibrate metering capacity"in the chapter "Repair".	Technical personnel
	The motor is wired incorrectly.	1. Check the mains voltage and mains frequency. 2. Wire the motor correctly.	Electrician
	The mains voltage has failed.	Eliminate the cause.	Electrician
	Operating diaphragm ruptured and alarm has not sounded.	■ Replace multi-layer diaphragm immediately - see "Diaphragm change" in the chapter "Repair". ■ Replace separating diaphragm of the diaphragm rupture sensor- see "Replacing the separating diaphragm, diaphragm rupture sensor" in the chapter "Repair".	Technical personnel
The overpressure sensor has triggered.	There is a blockage in the discharge line.	Clear the blockage.	Technical personnel
	The system back pressure was momentarily too high.	Clear the cause of the back pressure.	Technical personnel

Fault description	Cause	Remedy	Personnel
The diaphragm rupture sensor has triggered.	The operating diaphragm has ruptured.	■ Replace multi-layer diaphragm immediately - see "Diaphragm change" in the chapter "Repair". ■ Replace separating diaphragm of the diaphragm rupture sensor- see "Replacing the separating diaphragm, diaphragm rupture sensor" in the chapter "Repair".	Technical personnel
The power end motor is very hot.	The discharge line is seriously constricted.	■ Rectify any constriction of the discharge line. ■ Have the safety relief valve checked.	Technical personnel
All other faults.	Other causes.	Call the ProMinent Service.	

12 Decommissioning and Disposal

12.1 Decommissioning



WARNING!

Fire hazard with flammable media

Only with combustible media: These may start to burn when combined with oxygen.

– During filling and draining of the liquid end, an expert must ensure that feed chemical does not come into contact with oxygen.



WARNING!

Danger of an electric shock

When working on the motor or electrical auxiliary equipment, there is a danger of an electric shock.

– Before working on the motor, take note of the safety instructions in its operating instructions!
– Should external fans, servomotors or other auxiliary equipment be installed, these should also be disconnected and checked that they are voltage free.



WARNING!

Danger from chemical residues

There is normally chemical residue in the liquid end and on the housing after operation. This chemical residue could be hazardous to people.

– It is mandatory that the safety note relating to the "Storage, Transport and Unpacking" chapter is read before shipping or transporting the unit.
– Thoroughly clean the liquid end and the housing of chemicals and dirt. Adhere to the safety data sheet for the feed chemical.



WARNING!

Warning of dangerous or unknown feed chemical

Should a dangerous or unknown feed chemical be used: It may escape from the hydraulic components when working on the pump.

– Take appropriate protective measures before working on the pump (e.g. safety glasses, safety gloves, ...). Observe the safety data sheet for the feed chemical.
– Drain and flush the liquid end before working on the pump.



WARNING!

Hot oil and hot components

The hydraulic oil and the hydraulic end may become very hot when the pump is exposed to heavy loading.

– Allow the pump to cool before starting work.

CAUTION!

Warning of feed chemical spraying around

Feed chemical can spray out of the hydraulic components if they are manipulated or opened due to pressure in the liquid end and adjacent parts of the system.

– Disconnect the pump from the mains power supply and ensure that it cannot be switched on again by unauthorised persons.
– Depressurise the system before commencing any work on hydraulic parts.

CAUTION!

Danger of damage to the device

The device can be damaged by incorrect and improper storage or transportation.

– Take into account the information in the "Storage, Transport and Unpacking" chapter if the system is decommissioned for a temporary period.

Personnel: ■ Technical personnel

1. Disconnect the pump from the mains power supply.
2. Depressurise and bleed the hydraulic system around the pump.
3. Flush the liquid end with a suitable medium - Observe the safety data sheet! Flush the dosing head thoroughly when using hazardous feed chemicals!
4. Drain the hydraulic oil - see chapter "Maintenance".
5. Thoroughly clean the liquid end and the housing of chemicals and dirt.
6. Possible additional work - see chapter "Storage, Transport and Unpacking".

12.2 Disposal

Personnel: ■ Technical personnel

WARNING!

Danger due to spring tension

There is a spring under high tension between the diaphragm and the diaphragm mounting plate.

– Wear safety glasses.

WARNING!

Danger due to spring tension

There is a spring under high tension below the hydraulic cap under the diaphragm mounting plate.

– Only remove the hydraulic cap in line with the "Hydro repair and configuration instructions."



CAUTION!

Environmental hazard due to hydraulic oil

The pump contains hydraulic oil, which can cause damage to the environment.

– Drain the hydraulic oil from the pump.
– Note the local guidelines currently applicable in your country!

13 Technical data

Only for "M - modified" design:

WARNING!
Risk of personal injuries
Please observe the ”Supplement for modified version“ at the end of the chapter!

It replaces and supplements the technical data!

13.1 Performance data

HP2a at 50 Hz operation

Type	Minimum pump capacity at maximum back pressure			Maximum stroke rate	Suction lift	Permissible priming pressure, suction side	Connector size
	bar	l/h	ml/stroke	Strokes/min	m WS	bar	G-DN
100003*	100	3	0.8	60	3	5	Rp 3/8" - 10
100006*	100	6	0.8	125	3	5	Rp 3/8" - 10
100007*	100	7	0.8	150	3	5	Rp 3/8" - 10
100009*	100	9	0.8	187	3	5	Rp 3/8" - 10
100010*	100	10	0.8	212	3	5	Rp 3/8" - 10
064007	64	7	2.0	60	3	5	G 3/4" - 10
064015	64	15	2.0	125	3	5	G 3/4" - 10
064018	64	18	2.0	150	3	5	G 3/4" - 10
064022	64	22	2.0	187	3	5	G 3/4" - 10
064025	64	25	2.0	212	3	5	G 3/4" - 10
025019	25	19	5.3	60	3	5	G 3/4" - 10 **
025040	25	40	5.3	125	3	5	G 3/4" - 10 **
025048	25	48	5.3	150	3	5	G 3/4" - 10 **
025060	25	60	5.3	187	3	5	G 3/4" - 10 **
025068	25	68	5.3	212	3	5	G 3/4" - 10 **

*** Material version SST / HCT with double ball valve**

Alternative double ball valve SST with RP 3/8

**** HV design G1-DN 15**

Maximum back pressure for liquid ends in material version PVT: 25 bar!

The metering capacity can deviate from the details above with the HV version.

All figures refer to water at 20 °C.

Priming lift / priming pressure (dry) determined for empty suction line and empty liquid end and as well as clean and moistened valves (the figures are lower with valve springs).

The suction lift / suction pressure applies to filled suction lines and filled liquid end - when installed correctly.

HP2a at 60 Hz operation

Type	Minimum pump capacity at maximum back pressure				Maximum stroke rate	Suction lift	Permissible priming pressure, suction side	Connector size
	bar	psi	l/h	gph	Strokes/ min	m WS	bar	G-DN
100003*	100	1,450	3.6	1.0	72	3	5	Rp 3/8" - 10
100006*	100	1,450	7	1.8	150	3	5	Rp 3/8" - 10
100007*	100	1,450	8	2.1	180	3	5	Rp 3/8" - 10
100009*	100	1,450	11	2.9	224	3	5	Rp 3/8" - 10
064007	64	928	8.4	2.2	72	3	5	G 3/4" - 10
064015	64	928	18	4.8	150	3	5	G 3/4" - 10
064018	64	928	21	5.5	180	3	5	G 3/4" - 10
064022	64	928	26	6.9	224	3	5	G 3/4" - 10
025019	25	362	23	6.1	72	3	5	G 3/4" - 10 **
025040	25	362	48	12.7	150	3	5	G 3/4" - 10
025048	25	362	58	15.3	180	3	5	G 3/4" - 10
025060	25	362	72	19.0	224	3	5	G 3/4" - 10

* Material version SST / HCT with double ball valve

Alternative double ball valve SST with RP 3/8

** HV design G1-DN 15

Maximum back pressure for liquid ends in material version PVT: 25 bar!

The metering capacity can deviate from the details above with the HV version.

All figures refer to water at 20 °C.

Priming lift / priming pressure (dry) determined for empty suction line and empty liquid end and as well as clean and moistened valves (the figures are lower with valve springs).

The suction lift / suction pressure applies to filled suction lines and filled liquid end - when installed correctly.

HP3a at 50 Hz operation

Type	Minimum pump capacity at maximum back pressure			Maximum stroke rate	Suction lift	Permissible priming pressure, suction side	Connector size
	bar	l/h	ml/stroke	Strokes/min	m WS	bar	G-DN
100010*	100	10	2.8	60	3	5	Rp 3/8" - 10
100021*	100	21	2.8	125	3	5	Rp 3/8" - 10
100025*	100	25	2.8	150	3	5	Rp 3/8" - 10
100031*	100	31	2.8	187	3	5	Rp 3/8" - 10
100035*	100	35	2.8	212	3	5	Rp 3/8" - 10
064019	64	19	5.3	60	3	5	G 3/4" - 10 **
064040	64	40	5.3	125	3	5	G 3/4" - 10 **
064048	64	48	5.3	150	3	5	G 3/4" - 10 **
064060	64	60	5.3	187	3	5	G 3/4" - 10 **
064068	64	68	5.3	212	3	5	G 3/4" - 10 **
025048	25	48	13.4	60	3	5	G 1" - 10 ***
025100	25	100	13.4	125	3	5	G 1" - 10 ***
025120	25	120	13.4	150	3	5	G 1" - 10 ***
025150	25	150	13.4	187	3	5	G 1" - 10 ***
025170	25	170	13.4	212	3	5	G 1" - 10 ***

* Material version SST / HCT with double ball valve

Alternative double ball valve SST with RP 3/8

** HV design 1 1/4" - DN 20

*** HV version G 1" - DN 15

Maximum back pressure for liquid ends in material version PVT: 25 bar!

The metering capacity can deviate from the details above with the HV version.

All figures refer to water at 20 °C.

Priming lift / priming pressure (dry) determined for empty suction line and empty liquid end and as well as clean and moistened valves (the figures are lower with valve springs).

The suction lift / suction pressure applies to filled suction lines and filled liquid end - when installed correctly.

HP3a at 60 Hz operation

Type	Minimum pump capacity at maximum back pressure				Maximum stroke rate	Suction lift	Permissible priming pressure, suction side	Connector size
	bar	psi	l/h	gph	Strokes/ min	m WS	bar	G-DN
100010*	100	1,450	12	3.2	72	3	5	Rp 3/8" - 10
100021*	100	1,450	25	6.6	150	3	5	Rp 3/8" - 10
100025*	100	1,450	30	7.9	180	3	5	Rp 3/8" - 10
100031*	100	1,450	37	9.8	224	3	5	Rp 3/8" - 10
064019	64	928	23	6.1	72	3	5	G 3/4" - 10 **
064040	64	928	48	12.7	150	3	5	G 3/4" - 10 **
064048	64	928	58	15.3	180	3	5	G 3/4" - 10 **
064060	64	928	72	19.0	224	3	5	G 3/4" - 10 **
025048	25	362	58	15.3	72	3	5	G 1" - 10 ***
025100	25	362	120	31.7	150	3	5	G 1" - 10 ***
025120	25	362	144	38.0	180	3	5	G 1" - 10 ***
025150	25	362	180	47.6	224	3	5	G 1" - 10 ***

*** Material version SST / HCT with double ball valve**

Alternative double ball valve SST with RP 3/8

**** HV design 1 1/4" - DN 20**

***** HV version G 1" - DN 15**

Maximum back pressure for liquid ends in material version PVT: 25 bar!

The metering capacity can deviate from the details above with the HV version.

All figures refer to water at 20 °C.

Priming lift / priming pressure (dry) determined for empty suction line and empty liquid end and as well as clean and moistened valves (the figures are lower with valve springs).

The suction lift / suction pressure applies to filled suction lines and filled liquid end - when installed correctly.

13.2 Metering reproducibility

Data	Value	Unit
Reproducibility	±1	% *

* for measurements taken under constant conditions, minimum 20 % stroke rate and water at 20 °C - when installed correctly and with a back pressure of at least 1.5 bar

13.3 Viscosity

The liquid ends are suitable for the following viscosity ranges:

Design	Range	Unit
no valve springs	0 … 200	mPas
with valve springs	200 … 500	mPas
HV (for highly viscous feed chemicals)	500 ... approx. 3000 *	mPas

* Only when the installation is correctly adjusted

13.4 Weight

For SST material version pumps with standard motor.

Pump	Design	Weight
		kg
HP2a	Single head	31
	Double head	41
	Add-on power end	24
	Add-on power end double head	34
HP3a	Single head	41
	Double head	55
	Add-on power end	34
	Add-on power end double head	48

13.5 Wetted materials

Material version	Liquid end	Suction/pressure connector	Seals	Ball seat	Valve balls
SST	Stainless steel 1.4571//1.4404 / 1.4404	Stainless steel 1.4581	PTFE	ZrO2	Ceramic
PVT	PVDF	PVDF	PTFE	PTFE	Ceramic
HCT	Hastelloy C	Hastelloy C	PTFE	Hastelloy C	Ceramic

13.6 Ambient conditions

13.6.1 Temperatures

Pump, compl.

Data	Value	Unit
Storage and transport temperature	-10 ... +50	°C
Ambient temperature in operation ("Standard" version, for drive):	-10 ... +40	°C
Ambient temperature in operation ("Low temperature" version, for drive):	-25 ... +40	°C
Ambient temperature in operation ("Low temperature Zone 2" version, for drive):	-20 ... +40	°C

* Only with heating heating cartridge

PVT - ATEX liquid end

Data	Value	Unit
Max. temperature, long-term at max. operating pressure	65	°C
Minimum temperature "Standard"	-10	°C
Minimum temperature "Low temperature Zone 2"	-20	°C

PVT liquid end

Data	Value	Unit
Max. temperature, long-term at max. operating pressure	65	°C
Max. temperature, for 15 min at max. 2 bar	100	°C
Minimum temperature "Standard"	-10	°C
Minimum temperature "Low temperature Zone 2"	-20	°C
Minimum temperature "Low temperature"	-25	°C

HCT - ATEX liquid end

Data	Value	Unit
Max. temperature, long-term at max. operating pressure	90	°C
Minimum temperature "Standard"	-10	°C
Minimum temperature "Low temperature Zone 2"	-20	°C

HCT liquid end

Data	Value	Unit
Max. temperature, long-term at max. operating pressure	90	°C
Max. temperature, for 15 min at max. 2 bar	120	°C
Minimum temperature "Standard"	-10	°C
Minimum temperature "Low temperature Zone 2"	-20	°C
Minimum temperature "Low temperature"	-25	°C

SST - ATEX liquid end

Data	Value	Unit
Max. temperature, long-term at max. operating pressure	90	°C
Minimum temperature "Standard"	-10	°C
Minimum temperature "Low temperature Zone 2"	-20	°C

SST liquid end

Data	Value	Unit
Max. temperature, long-term at max. operating pressure	90	°C

Data	Value	Unit
Max. temperature, for 15 min at max. 2 bar	120	°C
Minimum temperature "Standard"	-10	°C
Minimum temperature "Low temperature Zone 2"	-20	°C
Minimum temperature "Low temperature"	-25	°C

13.6.2 Air humidity

Data	Value	Unit
Maximum air humidity*:	92	% relative humidity

*non-condensing (according to DIN IEC 60068-2-30)

13.7 Installation height

Data	Value	Unit
Maximum installation height*:	1000	m above standard zero

* Fit at higher installation heights at your own risk.

We urgently advise that you contact a specialist for ATEX motors when using ATEX pumps!

13.8 Housing degree of protection

Data	Value
Protection against contact and humidity*	IP 55

*according to DIN VDE 470 (EN IEC 60529)

13.9 Motor data

Electrical Data

HP2 and HP3

Identity code specification	Phase, protection	Rated voltage	Mains supply frequency	Rated output HP2a	Remarks
S	3-phase, IP 55	220-240 V / 380-420 V	50 Hz	0.37 kW	
		250-280 V / 440-480 V	60 Hz	0.37 kW	
L1	3 ph, II2GEEXeIIT3	220-240 V / 380-420 V	50 Hz	0.37 kW	
L2	3 ph, II2GEEX-dIICT4	220-240 V / 380-420 V	50 Hz	0.37 kW	with PTC, speed control range 1:5
P1	3 ph, II2GEEXeIIT3	250-280 V / 440-480 V	60 Hz	0.37 kW	

Identity code specification	Phase, protection	Rated voltage	Mains supply frequency	Rated output HP2a	Remarks
P2	3 ph, II2GEEX-dIICT4	250-280 V / 440-480 V	60 Hz	0.37 kW	with PTC, speed control range 1:5
R/Z	3-phase, IP 55	230 V / 400 V	50/60 Hz	0.37 kW	with PTC, speed control range 1:20 with external fan 1-ph 230 V; 50/60 Hz
V0	1 ph AC, IP 55	230 V ±10%	50/60 Hz	0.37 kW	Variable speed motor with integrated frequency converter
V2	3 ph, II2GEEX-dIICT4	400 V ±10%	50/60 Hz	0.55 kW	EX variable speed motor with integrated frequency converter.

HP3

Identity code specification	Phase, protection	Rated voltage	Mains supply frequency	Rated output	Remarks
S	3-phase, IP 55	220-240 V / 380-420 V	50 Hz	0.75 kW	
		250-280 V / 440-480 V	60 Hz	0.75 kW	
L1	3 ph, II2GEEXeIIT3	220-240 V / 380-420 V	50 Hz	0.75 kW	
L2	3 ph, II2GEEX-dIICT4	220-240 V / 380-420 V	50 Hz	0.75 kW	with PTC, speed control range 1:5
P1	3 ph, II2GEEXeIIT3	250-280 V / 440-480 V	60 Hz	0.75 kW	
P2	3 ph, II2GEEX-dIICT4	250-280 V / 440-480 V	60 Hz	0.75 kW	with PTC, speed control range 1:5
R/Z	3-phase, IP 55	230 V / 400 V	50/60 Hz	0.75 kW	with PTC, speed control range 1:20 with external fan 1-ph 230 V; 50/60 Hz
V0	1 ph AC, IP 55	230 V ±10%	50/60 Hz	0.75 kW	Variable speed motor with integrated frequency converter
V2	3 ph, II2GEEX-dIICT4	400 V ±10%	50/60 Hz		EX variable speed motor with integrated frequency converter.

Motor data sheets, special motors, special motor flanges, external fan, temperature monitoring

- *For further information for the motor with identity code specification "S", refer to the motor data sheet in the Appendix. Motor data sheets can be requested for all other motors.*
- *For other motors than those with identity code specification "S": Pay special attention to the operating instructions for the motors.*
- *Special motors or special motor flanges are possible on request.*

13.10 Diaphragm rupture sensor

Install the sensor according to the chapter "Installation, electrical".

Contact (standard)

Contact loading, max.

at voltage	Maximum current
30 V DC	1 A

The contact is an opener.

The contact is an potential-free.

- *For safety reasons we recommend connecting to a protective low voltage, e.g. in accordance with EN 60335-1 (SELV).*
- *The cable can be poled as required.*

Install the sensor according to the chapter "Installation, electrical". Observe its documentation.

Sensor name: NJ1.5-8GM-N.

:

Namur sensor (Specified for EX zones)

5–25 V DC, in accordance with Namur or DIN 19234, potential-free design.

Data	Value	Unit
Rated voltage *	8	VDC
Power consumption - active surface uncovered	> 3	mA
Power consumption - active surface covered	< 1	mA
Rated switching distance	1.5	mm

* Ri ~ 1 kΩ

Cable colour	Polarity
blue	-
brown	+

Install the sensor according to the chapter "Installation, electrical". Observe its documentation.

The sensor is of type NJ1,5-8GM-N.

13.11 Safety relief valve (HP2 and HP3)

Opening pressure of the respective pressure rating:

Pressure stage*	6 bar	10 bar	16 bar	25 bar	40 bar	64 bar	100 bar
Opening pressure**	10 bar	14 bar	25 bar	36 bar	50 bar	80 bar	120 bar

* Marking on the indicating scale without valve housing

** back pressure generated by the pump when discharge side is blocked ± 3 bar

13.12 Stroke sensor

Namur sensor (identity code characteristic "stroke sensor": 1)

Install the sensor according to the chapter "Installation, electrical".

Namur sensor (Specified for EX zones)

5–25 V DC, in accordance with Namur or DIN 19234, potential-free design.

Data	Value	Unit
Rated voltage *	8	VDC
Power consumption - active surface uncovered	> 3	mA
Power consumption - active surface covered	< 1	mA
Rated switching distance	1.5	mm

* Ri ~ 1 kΩ

Cable colour	Polarity
blue	-
brown	+

Install the sensor according to the chapter "Installation, electrical". Observe its documentation.

The sensor is of type NJ1,5-8GM-N.

13.13 Heating cartridge

Technical data - see enclosed operating instructions

13.14 Protection temperature limiter (ATEX only)

Technical data - see enclosed operating instructions

13.15 Filling volumes

13.15.1 Hydraulic oil

Required amount of oil			Supplied amount of oil
Type	Single-head design	Double head version	
HP 2:	approx. 2.5 l	approx. 2.9 l	3.0 l
HP 3:	approx. 3.5 l	approx. 4.0 l	4.0 l

Use	Manufacturer	Name	Viscosity class	Part no.
Standard	Mobil	Mobilube 1 SHC *	75W - 90	1005823

* or comparable hydraulic oil

Use	Manufacturer	Name	Viscosity class	Part no.
Food	Mobil	SHC Cibus *	220	1007610

* or comparable hydraulic oil

13.16 Sound pressure level HP2a / Hp3a

Sound pressure level

Sound pressure level LpA < 70 dB according to EN ISO 20361

at maximum stroke length, maximum stroke rate, maximum back pressure (water)

13.17 Supplement for modified versions

(With Identcode specification "Version": "M" - "modified")

Technical data

Technical data of pumps in the modified version can deviate from those of the standard pumps. They can be queried by stating the details of the serial number.

motor

The motor data sheets for the modified version are valid. They may deviate from the standard motor data sheets.

Spare parts

With a modified version, it is absolutely necessary to specify the details of the serial number requesting and ordering the spare and replacement parts.

14 Ordering Information

14.1 Exploded view of the drawing

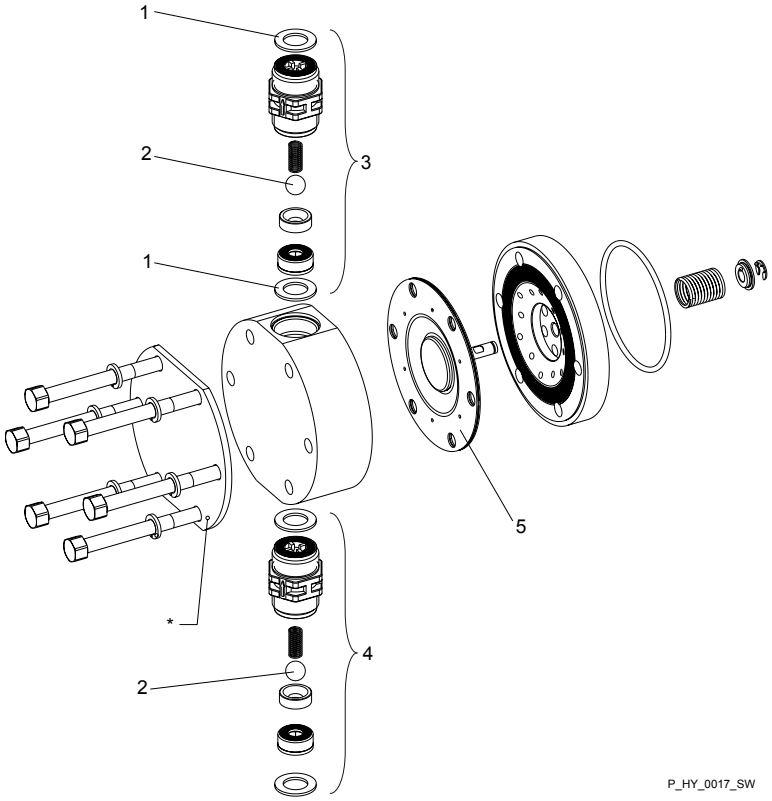

Fig. 23: Exploded view of Hydro liquid end Numbered positions = PVT set of spare parts - range for supply. Technical changes reserved.

1 Seals (Set)
2 Valve balls
3 Pressure connection assy.
4 Suction connection assy.
5 Diaphragm
* Reinforce plate - only with PVT

14.2 Spare parts kits

The spare part kits include the replacement parts for the liquid ends.

Standard delivery for material version PVT

1 - Diaphragm

1 - Suction connection assy.

1 - Pressure connection assy.

2 - Valve balls

1 - Set of seals, compl.

Standard delivery for material version SST / HCT

1 - Diaphragm

2 - Valve balls

1 - Set of seals, compl.

Spare parts kits Hydro/ 2

for types: 100010, 100009, 100007, 100006, 100003, 064025, 064022, 064018, 064015, 064007:

for liquid end	Material version	Order no.
FMH 25 - DN 10	PVT	1005548
	SST	1005549
	SST (for double ball valves)	1005551
	HCT	1009571
	SST (with valves, fully assembled)	1005550

.

for types: 025068, 025060, 025048, 025040, 025019:

for liquid end	Material version	Order no.
FMH 60 - DN 10	PVT	1005552
	SST	1005553
	SST (for double ball valves)	1005555
	HCT	1009573
	SST (with valves, fully assembled)	1005554

Spare parts kits Hydro/ 3

for types: 100035, 100031, 100025, 100021, 100010, 064068, 064060, 064048, 064040, 064019:

for liquid end	Material version	Order no.
FMH 60 - DN 10	PVT	1005552
	SST	1005553
	SST (for double ball valves)	1005555
	HCT	1009573
	SST (with valves, fully assembled)	1005554

.

for types: 025170, 025150, 025120, 025100, 025048:

for liquid end	Material version	Order no.
FMH 150 - DN 15	PVT	1005556
	SST	1005557
	HCT	1009575
	SST (with valves, fully assembled)	1005558

14.3 Diaphragms

Metering diaphragm PTFE

for liquid end	Pump type	Order no.
FMH 25	100010, 100009, 100007, 100006, 100003 064025, 064022, 064018, 064015, 064007	1005545
FMH 60	025068, 025060, 025048, 025040, 025019	1005546

Metering diaphragm PTFE / Hastelloy C, coated

for liquid end	Pump type	Order no.
FMH 25	064025, 064022, 064018, 064015, 064007	1006481
FMH 60	025068, 025060, 025048, 025040, 025019	1006482

Metering diaphragm PTFE

for liquid end	Pump type	Order no.
FMH 60	064068, 064060, 064048, 064040, 064019 100035, 100031, 100025, 100021, 100010	1005546
FMH 150	025170, 025150, 025120, 025100, 025048	1005547

Metering diaphragm PTFE / Hastelloy C, coated

for liquid end	Pump type	Order no.
FMH 60	064068, 064060, 064048, 064040, 064019 100035, 100031, 100025, 100021, 100010	1006482
FMH 150	025170, 025150, 025120, 025100, 025048	1006483

14.4 General

Hydraulic oil

The pump uses an hydraulic oil that lubricates the gear at the same time.

Use	Manufacturer	Name	Viscosity class	Part no.
Standard	Mobil	Mobilube 1 SHC *	75W - 90	1005823

* or comparable hydraulic oil

Use	Manufacturer	Name	Viscosity class	Part no.
Food	Mobil	SHC Cibus *	220	1007610

* or comparable hydraulic oil

Required amount of oil			Supplied amount of oil
Type	Single-head design	Double head version	
HP 2:	approx. 2.5 l	approx. 2.9 l	3.0 l
HP 3:	approx. 3.5 l	approx. 4.0 l	4.0 l

Seal

Spare part	Order no.
Seal for the oil drainage stopper	1004803

15 Dimensional Drawings

- *Compare the dimensions on the dimension sheet and pump.*
- *All dimensions are in mm.*

Hydro HP2 (HP2a H) dimensions sheet

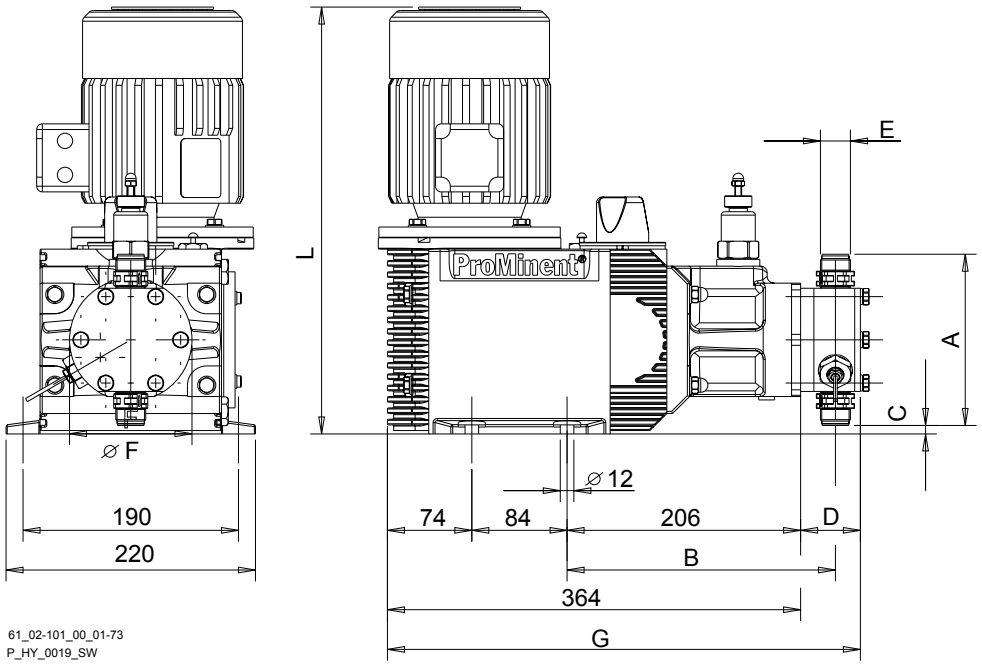

Fig. 24: Diagram is not binding.

Liquid end	A	B	C	D	E	F	G
HM 25 SST, HCT	152	239	7	50	DN10G3/4A	108x42	414
HM 60 SST, HCT	165	240	0.5	51	DN10G3/4A	108x57	415
HM 60 SST-HV	165	243.5	0.5	57	DN15G1A	108x57	421
"HM 25" for types 064007, 064015, 064018, 064022, 064025, 100003, 100006, 100007, 100009, 100010							
"HM 60" for types 025019, 025040, 025048, 025060, 025068							

Liquid end	A	B	C	D	E	F	G
HM 25 PVT	152	239	7	49	DN10G3/4A	108x42	413
HM 60 PVT	165	240	0.5	55	DN10G3/4A	108x57	419
"HM 25" for types 064007, 064015, 064018, 064022, 064025, 100003, 100006, 100007, 100009, 100010							
"HM 60" for types 025019, 025040, 025048, 025060, 025068							

Dimension with double ball valve

Liquid end	A	B	C	D	E	G
HM 25 SST, HCT	180	241	-7	54	DN10Rp3/8"	418
HM 60 SST, HCT	195	242	20.5	55	DN10Rp3/8"	419

	Standard motor	Motor, controllable	EExe motor	EExde motor	Motor with frequency converter
L	377	413	469	438	569

Hydro HP3 (HP3a H) dimensions sheet

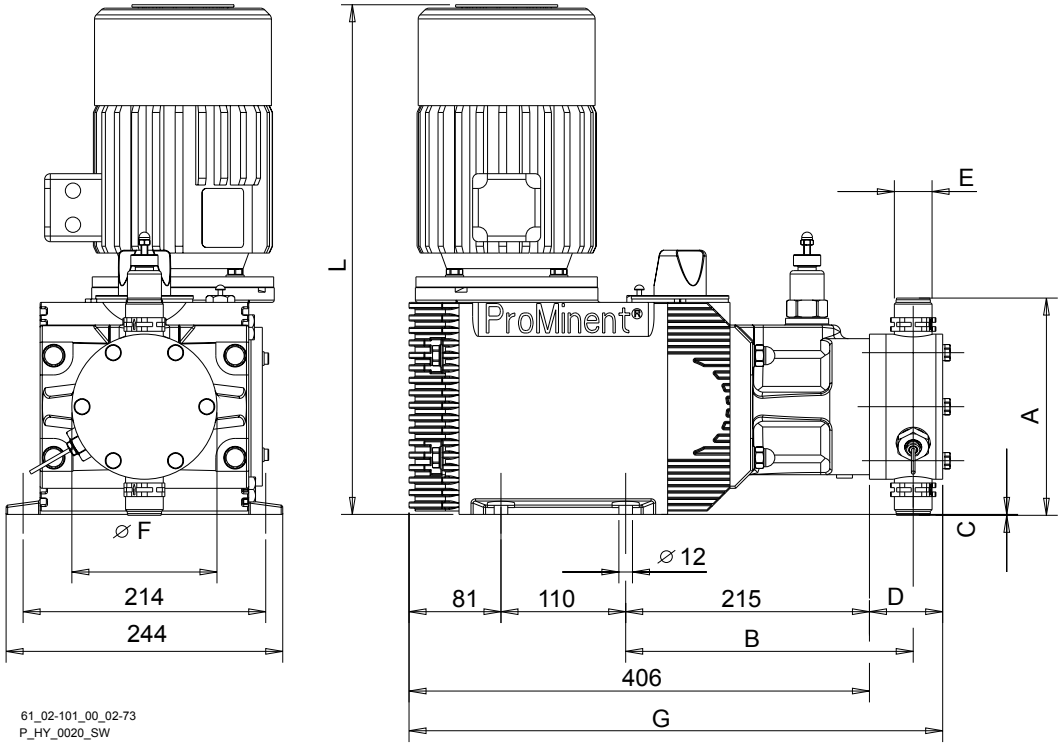

Fig. 25: Diagram is not binding.

Liquid end	A	B	C	D	E	F	G
HM 60 SST, HCT	165	240	12.5	51	DN10G3/4A	108x57	457
HM 150 SST, HCT	191	247	-0.5	65	DN15G1A	128x76	471
"HM 60" for types 064019, 064040, 064048, 064060, 064068, 100010, 100021, 100025, 100031, 100035							
"HM 150" for types 025048, 025100, 025120, 025150, 025170							

Liquid end	A	B	C	D	E	F	G
HM 60 SST-HV	165	243.5	12.5	57	DN15G1A	108x57	463
HM 150 SST-HV	203	251	6.5	75	DN20G1 1/4A	128x76	481
HM 60 PVT	165	240	12.5	55	DN10G3/4A	108x57	461
HM 150 PVT	191	247	-0.5	61	DN15G1A	128x76	467
"HM 60" for types 064019, 064040, 064048, 064060, 064068, 100010, 100021, 100025, 100031, 100035							
"HM 150" for types 025048, 025100, 025120, 025150, 025170							

Dimension with double ball valve

Liquid end	A	B	C	D	E	G
HM 60 SST, HCT	195	242	-2.5	55	DN10Rp3/8"	461

	Standard motor	Motor, controllable	EExe motor	EExde motor	Motor with frequency converter
L	456	553	459	499	626

Hydro HP2 (HP2a H) dimensions sheet, double head version (HP2a D)

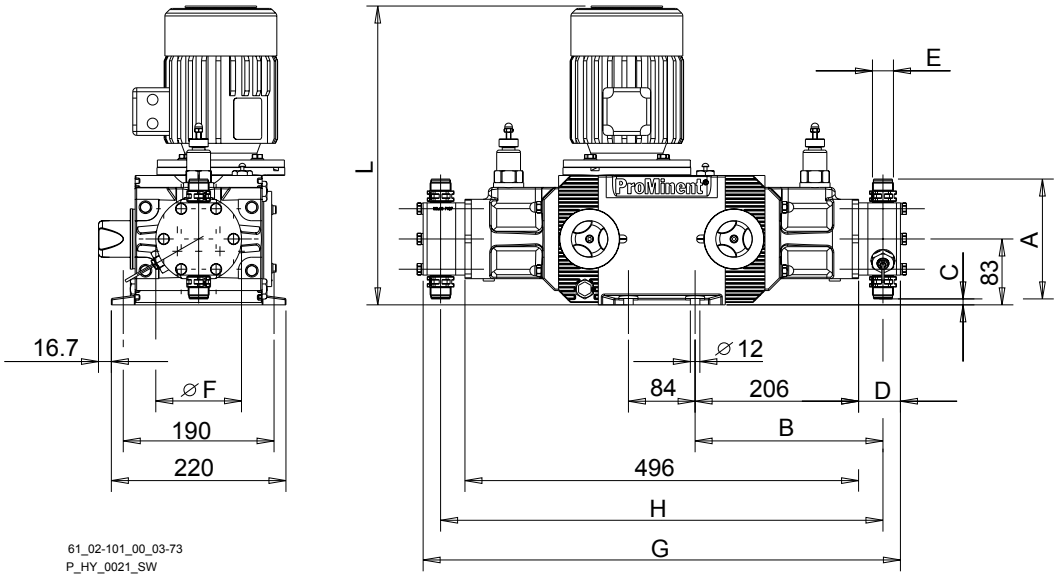

Fig. 26: Diagram is not binding.

Liquid end	A	B	C	D	E	F	G	H
HM 25 SST, HCT	152	239	7	50	DN10G3/4A	108x42	596	562
HM 60 SST, HCT	165	240	0.5	51	DN10G3/4A	108x57	598	564
HM 60 SST-HV	165	243.5	0.5	57	DN15G1A	108x57	610	571
"HM 25" for types 064007, 064015, 064018, 064022, 064025, 100003, 100006, 100007, 100009, 100010								
"HM 60" for types 025019, 025040, 025048, 025060, 025068								

Liquid end	A	B	C	D	E	F	G	H
HM 25 PVT	152	239	7	49	DN10G3/4A	108x42	594	562
HM 60 PVT	165	240	0.5	55	DN10G3/4A	108x57	606	564
"HM 25" for types 064007, 064015, 064018, 064022, 064025, 100003, 100006, 100007, 100009, 100010								
"HM 60" for types 025019, 025040, 025048, 025060, 025068								

Dimension with double ball valve

Liquid end	A	B	C	D	E	G	H
HM 25 SST, HCT	180	241	-7	54	DN10Rp3/8"	604	566
HM 60 SST, HCT	195	242	-20.5	55	DN10Rp3/8"	606	568

	Standard motor	Motor, controllable	EExe motor	EExde motor	Motor with frequency converter
L	377	413	369	438	569

Hydro HP3 dimensions sheet, double head version (HP3a D)

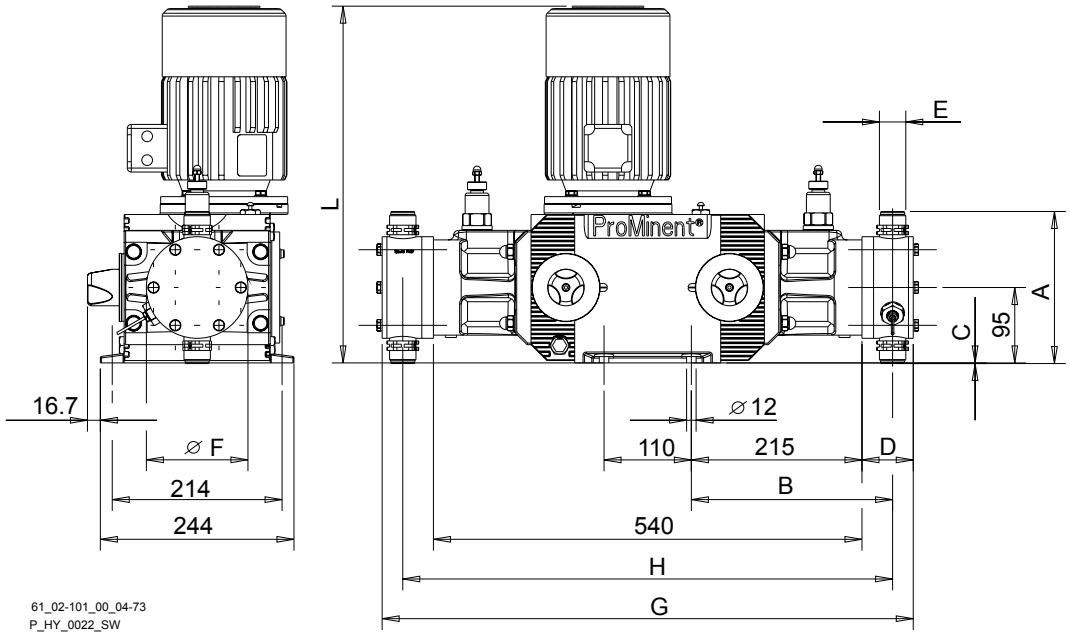

Fig. 27: Diagram is not binding.

Liquid end	A	B	C	D	E	F	G	H
HM 60 SST, HCT	165	240	12.5	51	DN10G3/4A	108x57	641	590
HM 150 SST, HCT	191	247	-0.5	65	DN15G1A	128x76	670	604
HM 60 SST-HV	165	243.5	12.5	57	DN15G1A	108x57	653	597
HM 150 SST-HV	203	251	6.5	75	DN20G1 1/4A	128x76	690	612
"HM 60" for types 064019, 064040, 064048, 064060, 064068, 100010, 100021, 100025, 100031, 100035								
"HM 150" for types 025048, 025100, 025120, 025150, 025170								

Liquid end	A	B	C	D	E	F	G	H
HM 60 PVT	165	240	12.5	55	DN10G3/4A	108x57	650	590
HM 150 PVT	191	247	-0.5	61	DN15G1A	128x76	661	604
"HM 60" for types 064019, 064040, 064048, 064060, 064068, 100010, 100021, 100025, 100031, 100035								
"HM 150" for types 025048, 025100, 025120, 025150, 025170								

Dimension with double ball valve

Liquid end	A	B	C	D	E	G	H
HM 60 SST, HCT	195	242	-2.5	55	DN10Rp3/8"	650	594

	Standard motor	Motor, controllable	EExe motor	EExde motor	Motor with frequency converter
L	456	553	459	499	626

Hydro HP2 dimensions sheet with add-on drive (HP2a E + HP2a A)

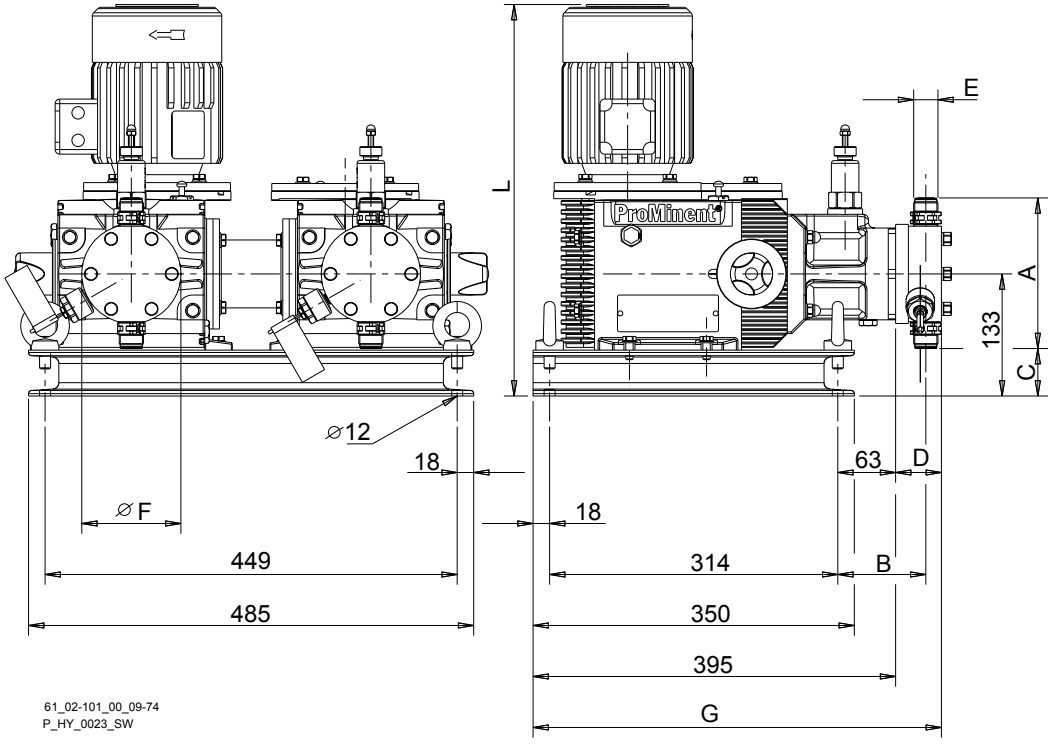

Fig. 28: Diagram is not binding.

Liquid end	A	B	C	D	E	F	G
HM 25 SST, HCT	152	95	59	50	DN10G3/4A	108x42	444
HM 60 SST, HCT	165	96	52	51	DN10G3/4A	108x57	445
HM 60 SST-HV	165	99	49	57	DN15G1A	108x57	451
"HM 25" for types 064007, 064015, 064018, 064022, 064025, 100003, 100006, 100007, 100009, 100010							
"HM 60" for types 025019, 025040, 025048, 025060, 025068							

Liquid end	A	B	C	D	E	F	G
HM 25 PVT	152	95	57	49	DN10G3/4A	108x42	443
HM 60 PVT	165	96	51	55	DN10G3/4A	108x57	449
"HM 25" for types 064007, 064015, 064018, 064022, 064025, 100003, 100006, 100007, 100009, 100010							
"HM 60" for types 025019, 025040, 025048, 025060, 025068							

Dimension with double ball valve

Liquid end	A	B	C	D	E	G
HM 25 SST, HCT	180	97	37	54	DN10Rp3/8"	448
HM 60 SST, HCT	195	98	30	55	DN10Rp3/8"	449

	Standard motor	Motor, controllable	EExe motor	EExde motor	Motor with frequency converter
L	427	463	419	488	619

Hydro HP3 dimensions sheet with add-on drive (HP3a E + HP3a A)

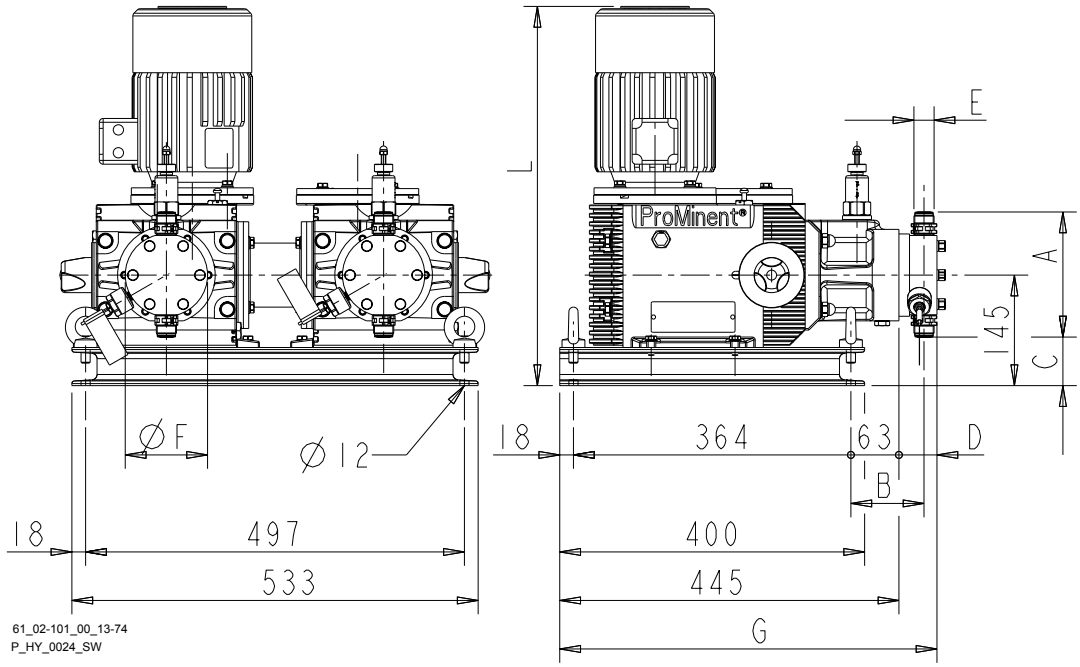

Fig. 29: Diagram is not binding.

Liquid end	A	B	C	D	E	F	G
HM 60 SST, HCT	165	96	64	51	DN10G3/4A	108x57	495
HM 150 SST, HCT	191	104	50	65	DN15G1A	128x76	506
HM 60 SST-HV	165	100	61	57	DN15G1A	108x57	501
"HM 60" for types 064019, 064040, 064048, 064060, 064068, 100010, 100021, 100025, 100031, 100035							
"HM 150" for types 025048, 025100, 025120, 025150, 025170							

Liquid end	A	B	C	D	E	F	G
HM 150 SST-HV	203	108	40	75	DN20G1 1/4A	128x76	516
HM 60 PVT	165	96	63	55	DN10G3/4A	108x57	499
HM 150 PVT	191	104	49	61	DN15G1A	128x76	506
"HM 60" for types 064019, 064040, 064048, 064060, 064068, 100010, 100021, 100025, 100031, 100035							
"HM 150" for types 025048, 025100, 025120, 025150, 025170							

Dimension with double ball valve

Liquid end	A	B	C	D	E	G
HM 60 SST, HCT	195	98	43	55	DN10Rp3/8"	499

	Standard motor	Motor, controllable	EExe motor	EExde motor	Motor with frequency converter
L	506	603	509	549	676

Hydro HP2 dimensions sheet with add-on drive, double-head versions (HP2a F + HP2a B)

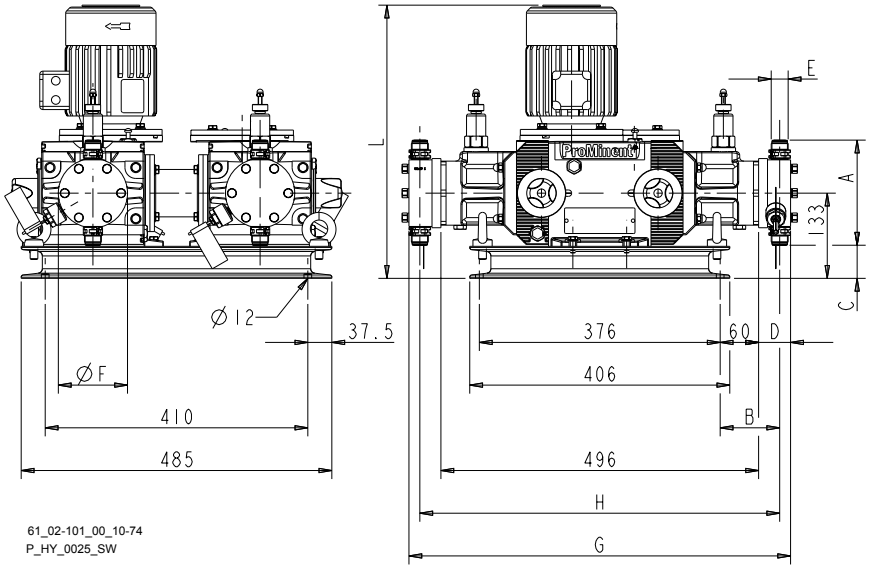

Fig. 30: Diagram is not binding.

Liquid end	A	B	C	D	E	F	G	H
HM 25 SST, HCT	152	92	59	50	DN10G3/4A	108x42	596	562
HM 60 SST, HCT	165	93	52	51	DN10G3/4A	108x57	598	564
HM 60 SST-HV	165	97	49	57	DN15G1A	108x57	610	571
"HM 25" for types 064007, 064015, 064018, 064022, 064025, 100003, 100006, 100007, 100009, 100010								
"HM 60" for types 025019, 025040, 025048, 025060, 025068								

Liquid end	A	B	C	D	E	F	G	H
HM 25 PVT	152	92	57	49	DN10G3/4A	108x42	594	562
HM 60 PVT	165	93	51	55	DN10G3/4A	108x57	606	564
"HM 25" for types 064007, 064015, 064018, 064022, 064025, 100003, 100006, 100007, 100009, 100010								
"HM 60" for types 025019, 025040, 025048, 025060, 025068								

Dimension with double ball valve

Liquid end	A	B	C	D	E	G	H
HM 25 SST, HCT	180	94	37	54	DN10Rp3/8"	604	566
HM 60 SST, HCT	195	95	30	55	DN10Rp3/8"	606	568

	Standard motor	Motor, controllable	EExe motor	EExde motor	Motor with frequency converter
L	427	463	419	488	619

Hydro HP3 dimensions sheet with add-on drive, double-head versions (HP3a F + HP3a B)

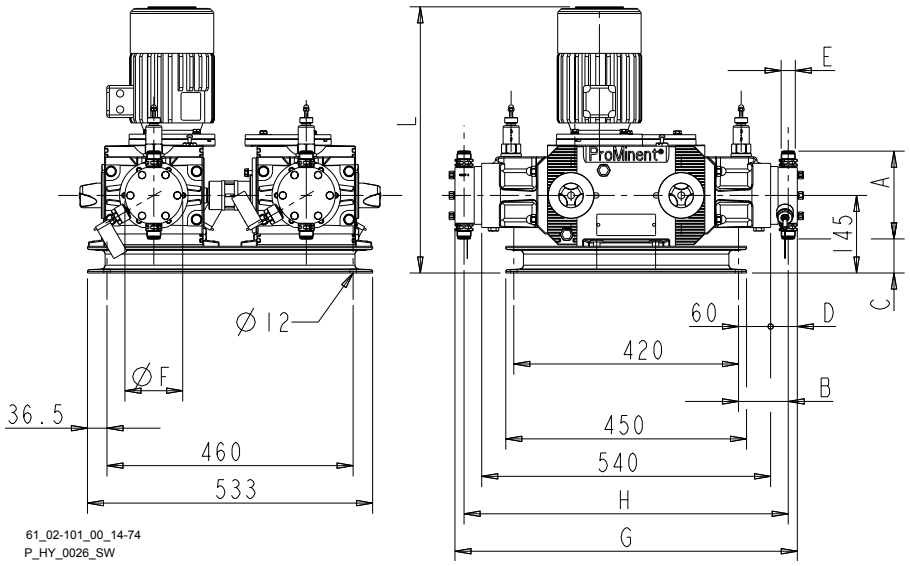

Fig. 31: Diagram is not binding.

Liquid end	A	B	C	D	E	F	G	H
HM 60 SST, HCT	165	93	64	51	DN10G3/4A	108x57	641	590
HM 150 SST, HCT	191	101	50	65	DN15G1A	128x76	670	604
HM 60 SST-HV	165	97	61	57	DN15G1A	108x57	653	597
HM 150 SST-HV	203	105	40	75	DN20G1 1/4A	128x76	690	612
"HM 60" for types 064019, 064040, 064048, 064060, 064068, 100010, 100021, 100025, 100031, 100035								
"HM 150" for types 025048, 025100, 025120, 025150, 025170								

Liquid end	A	B	C	D	E	F	G	H
HM 60 PVT	165	93	63	55	DN10G3/4A	108x57	650	590
HM 150 PVT	191	101	49	61	DN15G1A	128x76	661	604
"HM 60" for types 064019, 064040, 064048, 064060, 064068, 100010, 100021, 100025, 100031, 100035								
"HM 150" for types 025048, 025100, 025120, 025150, 025170								

Dimension with double ball valve

Liquid end	A	B	C	D	E	G	H
HM 60 SST, HCT	195	95	43	55	DN10Rp3/8"	650	594

	Standard motor	Motor, controllable	EExe motor	EExde motor	Motor with frequency converter
L	506	603	509	549	676

16 Earthing drawing

Simplex single head Hydro HP2 and HP3 with actuator and heating cartridge

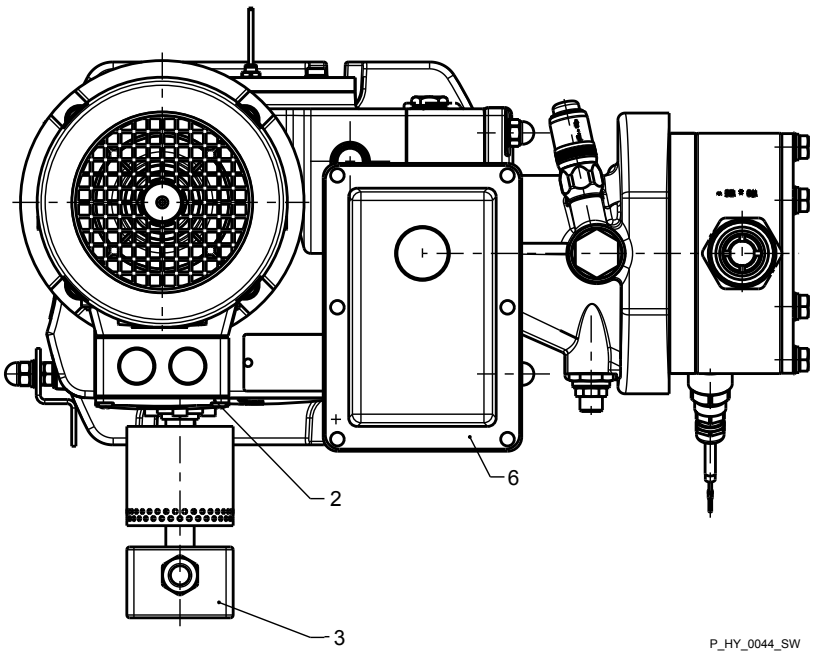

2 Motor
3 Heating cartridge (option)
6 Actuator

17 EC Declaration of Conformity for Machinery

For pumps without explosion protection:

In accordance with DIRECTIVE 2006/42/EC OF THE EUROPEAN PARLIAMENT AND OF THE COUNCIL, Appendix I, BASIC HEALTH AND SAFETY REQUIREMENTS, section 1.7.4.2. C.

We,

- ProMinent Dosiertechnik GmbH
- Im Schuhmachergewann 5 - 11
- D - 69123 Heidelberg,

hereby declare that the product specified in the following, complies with the relevant basic health and safety requirements of the EC Directive, on the basis of its functional concept and design and in the version distributed by us.

This declaration loses its validity in the event of a modification to the product not agreed with us.

Extract from the EC Declaration of Conformity

Designation of the product:	Metering pump product range Hydro 2, Hydro 3 and Hydro 4
Product type:	HP2a... HP3a... HP4a...
Serial number:	See nameplate on the unit
Relevant EC directives:	EC Machinery Directive (2006/42/EC) EC EMC Directive (2004/108/EC) Compliance with the protection targets of the Low Voltage Directive 2006/95/EC according to Appendix I, No. 1.5.1 of the Machinery Directive 2006/42/EC
Harmonised standards applied, in particular:	EN ISO 12100, EN 809 EN 60204-1 EN 61000-6-2/4
Date:	30/09/2013

You can find the EC Declaration of Conformity as a download on our homepage.

18 EC Declaration of Incorporation for ATEX HP2 Machines

We,

- ProMinent GmbH
- Im Schuhmachergewann 5 - 11
- D - 69123 Heidelberg,

hereby declare that the product specified in the following, complies with the relevant basic health and safety requirements of the EC Directive, on the basis of its functional concept and design and in the version distributed by us. Technical documents were produced in line with Appendix VII Part B.

Any modification to the product not approved by us will invalidate this declaration.

Extract from the EC Declaration of Incorporation

Designation of the product:	Metering pump without motor, product range Hydro 2 Design for use in areas at risk of explosion in accordance with the ATEX Directive (94/9/EC)
Product type:	HP2a - - - - - - - - - - - - - - § A - 0 & with the characteristic § = "1" or "3" or "4" & = "0" or "1" or "3"
Serial number:	see nameplate on the device
Relevant EC directives:	EC ATEX Directive (94/9/EC) EC Machinery Directive (2006/42/EC) EC EMC Directive (2004/108/EC) Compliance with the protection targets of the Low Voltage Directive 2006/95/EC according to Appendix I, No. 1.5.1 of the Machinery Directive 2006/42/EC
Harmonised standards applied, in particular:	EN 13463-1:2009, EN 13463-5:2011 EN ISO 12100:2010, EN 809:1998+A1:2009-AC:2010 EN 61000-6-2:2005, EN 61000-6-4:2007+A1:2011 EN 60204-1:2006+A1:2009
Only start up the pump when it has been established that the machine into which the pump has been installed corresponds to the provisions of the Machine Directive.	
EX specification of the entire system:	II 2G IIC T4 X for & = "0" or "1" II 3G IIB T4 X for & = "3" X: maximum medium temperature 90 °C
Assess the ignition risk when combining the pump and motor.	
Date:	15/10/2015

You will find the EC Declaration of Incorporation to download on our homepage.

19 EC Declaration of Incorporation for ATEX HP3 Machines

In accordance with DIRECTIVE 2006/42/EC OF THE EUROPEAN PARLIAMENT AND OF THE COUNCIL, Appendix I, BASIC HEALTH AND SAFETY REQUIREMENTS, section 1.7.4.2. C.

We,

- ProMinent GmbH
- Im Schuhmachergewann 5 - 11
- D - 69123 Heidelberg,

hereby declare that the product specified in the following, complies with the relevant basic health and safety requirements of the EC Directive, on the basis of its functional concept and design and in the version distributed by us. Technical documents were produced in line with Appendix VII Part B.

Any modification to the product not approved by us will invalidate this declaration.

Extract from the EC Declaration of Incorporation

Designation of the product:	Metering pump without motor, product range Hydro 3 Design for use in areas at risk of explosion in accordance with the ATEX Directive (94/9/EC)
Product type:	HP3a - - - - - - - - - - - - - - § A - 0 & with the characteristic § = "1" or "3" or "4" & = "0" or "1" or "3"
Serial number:	see nameplate on the device
Relevant EC directives:	EC ATEX Directive (94/9/EC) EC Machinery Directive (2006/42/EC) EC EMC Directive (2004/108/EC) Compliance with the protection targets of the Low Voltage Directive 2006/95/EC according to Appendix I, No. 1.5.1 of the Machinery Directive 2006/42/EC
Harmonised standards applied, in particular:	EN 13463-1:2009, EN 13463-5:2011 EN ISO 12100:2010, EN 809:1998+A1:2009+AC2010 EN 61000-6-2:2005, EN 61000-6-4:2007+A1:2011 EN 60204-1:2006+A1:2009
Only start up the pump when it has been established that the machine into which the pump has been installed corresponds to the provisions of the Machine Directive.	
EX specification of the entire system:	II 2G IIC T4 X for & = "0" or "1" II 3G IIB T4 X for & = "3" X: maximum medium temperature 90 °C
Assess the ignition risk when combining the pump and motor.	
Date:	15/10/2015

You will find the EC Declaration of Incorporation to download on our homepage.

20 EC Declaration of Conformity for ATEX HP2 Machines

In accordance with DIRECTIVE 2006/42/EC OF THE EUROPEAN PARLIAMENT AND OF THE COUNCIL, Appendix I, BASIC HEALTH AND SAFETY REQUIREMENTS, section 1.7.4.2. C.

We,

- ProMinent GmbH
- Im Schuhmachergewann 5 - 11
- D - 69123 Heidelberg,

hereby declare that the product specified in the following, complies with the relevant basic health and safety requirements of the EC Directive, on the basis of its functional concept and design and in the version distributed by us.

Any modification to the product not approved by us will invalidate this declaration.

Extract from the EC Declaration of Conformity

Designation of the product:	Metering pump, product range Hydro 2 Design for use in areas at risk of explosion in accordance with the ATEX Directive (94/9/EC)
Product type:	HP2a - - - - - - - - - - - - - - § $ - 0 & with characteristics § = "L" or "P" and $ = "1" or "2" or § = "V" and $ = "2" & = "0" or "1" or "3"
Serial number:	see nameplate on the device
Relevant EC directives:	EC ATEX Directive (94/9/EC) EC Machinery Directive (2006/42/EC) EC EMC Directive (2004/108/EC) Compliance with the protection targets of the Low Voltage Directive 2006/95/EC according to Appendix I, No. 1.5.1 of the Machinery Directive 2006/42/EC
Harmonised standards applied, in particular:	EN 13463-1:2009, EN 13463-5:2011 EN ISO 12100:2010, EN 809:1998+A1:2009+AC:2010 EN 61000-6-2:2005, EN 61000-6-4:2007+A1:2011 EN 60204-1:2006+A1:2009
EX specification of the entire system:	II 2G IIC T3 X for $ = "1" and & = "0" or "1" II 2G IIC T4 X for $ = "2" and & = "0" or "1" II 3G IIC T3 X for $ = "1" and & = "3" II 3G IIC T4 X for $ = "2" and & = "3" X: maximum medium temperature 90 °C
Date:	15/10/2015

You will find the EC Declaration of Conformity to download on our homepage.

21 EC Declaration of Conformity for ATEX HP3 Machines

In accordance with DIRECTIVE 2006/42/EC OF THE EUROPEAN PARLIAMENT AND OF THE COUNCIL, Appendix I, BASIC HEALTH AND SAFETY REQUIREMENTS, section 1.7.4.2. C.

We,

- ProMinent GmbH
- Im Schuhmachergewann 5 - 11
- D - 69123 Heidelberg,

hereby declare that the product specified in the following, complies with the relevant basic health and safety requirements of the EC Directive, on the basis of its functional concept and design and in the version distributed by us.

Any modification to the product not approved by us will invalidate this declaration.

Extract from the EC Declaration of Conformity

Designation of the product:	Metering pump, product range Hydro 3 Design for use in areas at risk of explosion in accordance with the ATEX Directive (94/9/EC)
Product type:	HP3a - - - - - - - - - - - - - - § $ - 0 & with characteristics § = "L" or "P" and $ = "1" or "2" or § = "V" and $ = "2" & = "0" or "1" or "3"
Serial number:	see nameplate on the device
Relevant EC directives:	EC ATEX Directive (94/9/EC) EC Machinery Directive (2006/42/EC) EC EMC Directive (2004/108/EC) Compliance with the protection targets of the Low Voltage Directive 2006/95/EC according to Appendix I, No. 1.5.1 of the Machinery Directive 2006/42/EC
Harmonised standards applied, in particular:	EN 13463-1:2009, EN 13463-5:2011 EN ISO 12100:2010, EN 809:1998+A1:2009+AC:2010 EN 61000-6-2:2005, EN 61000-6-4:2007+A1:2011 EN 60204-1:2006+A1:2009
EX specification of the entire system:	II 2G IIC T3 X for $ = "1" and & = "0" or "1" II 2G IIC T4 X for $ = "2" and & = "0" or "1" II 3G IIC T3 X for $ = "1" and & = "3" II 3G IIC T4 X for $ = "2" and & = "3" X: maximum medium temperature 90 °C
Date:	15/10/2015

You will find the EC Declaration of Conformity to download on our homepage.

22 Diagrams for setting the metering capacity

Hydro/ 2 HP2a H

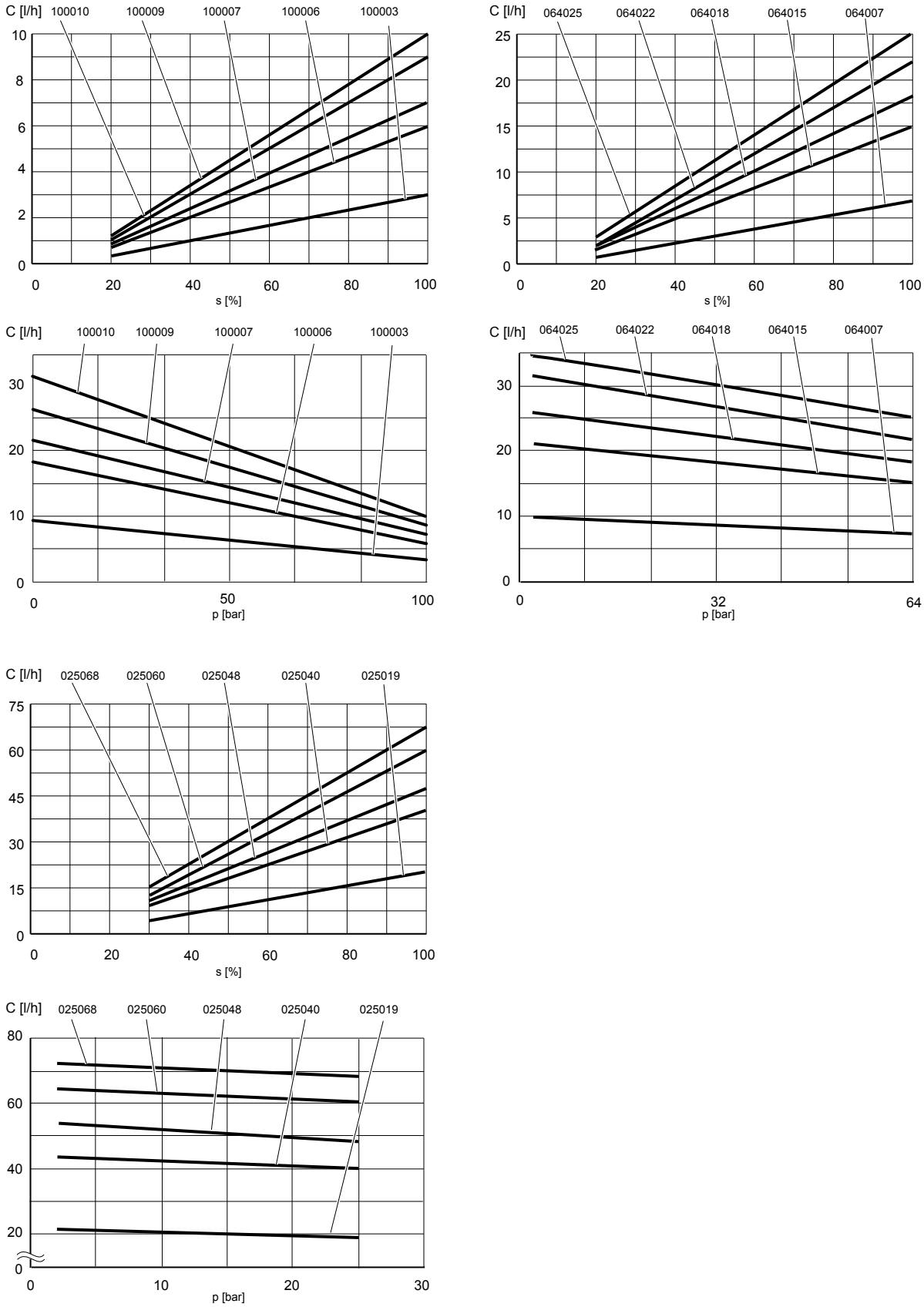

Fig. 32: Metering capacity C at medium back pressure according to the stroke length s and metering capacity C on the basis of back pressure p for different types of a series.

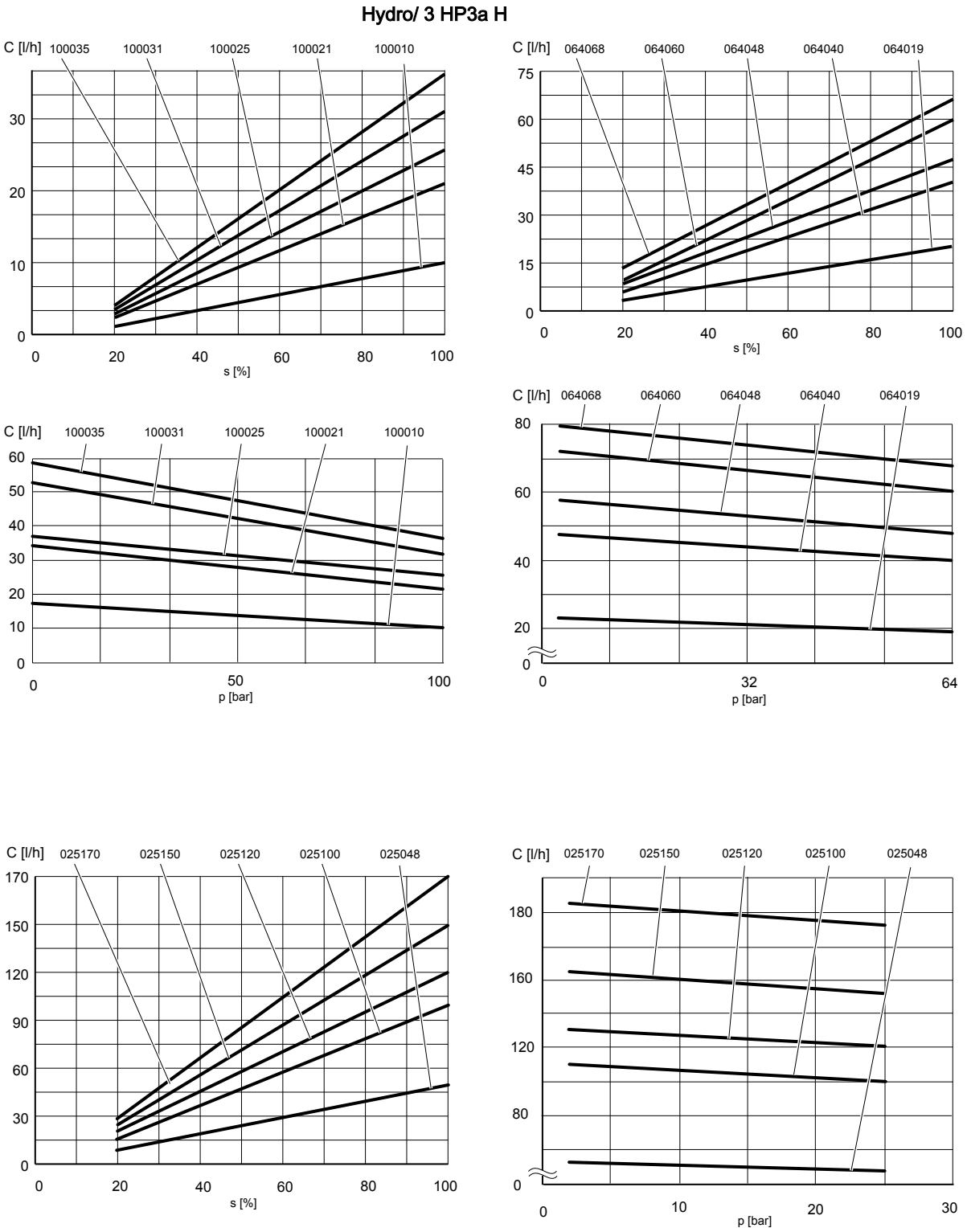

Fig. 33: Metering capacity C at medium back pressure according to the stroke length s and metering capacity C on the basis of back pressure p for different types of a series.



ProMinent GmbH
Im Schuhmachergewann 5-11
69123 Heidelberg
Germany
Telephone: ++49 6221 842-0
Fax: ++49 6221 842-419
Email: info@prominent.com
Internet: www.prominent.com

Heidelberg, 7, en_GB

© 2010